2016

ROADWAY DESIGN & CONSTRUCTION STANDARDS

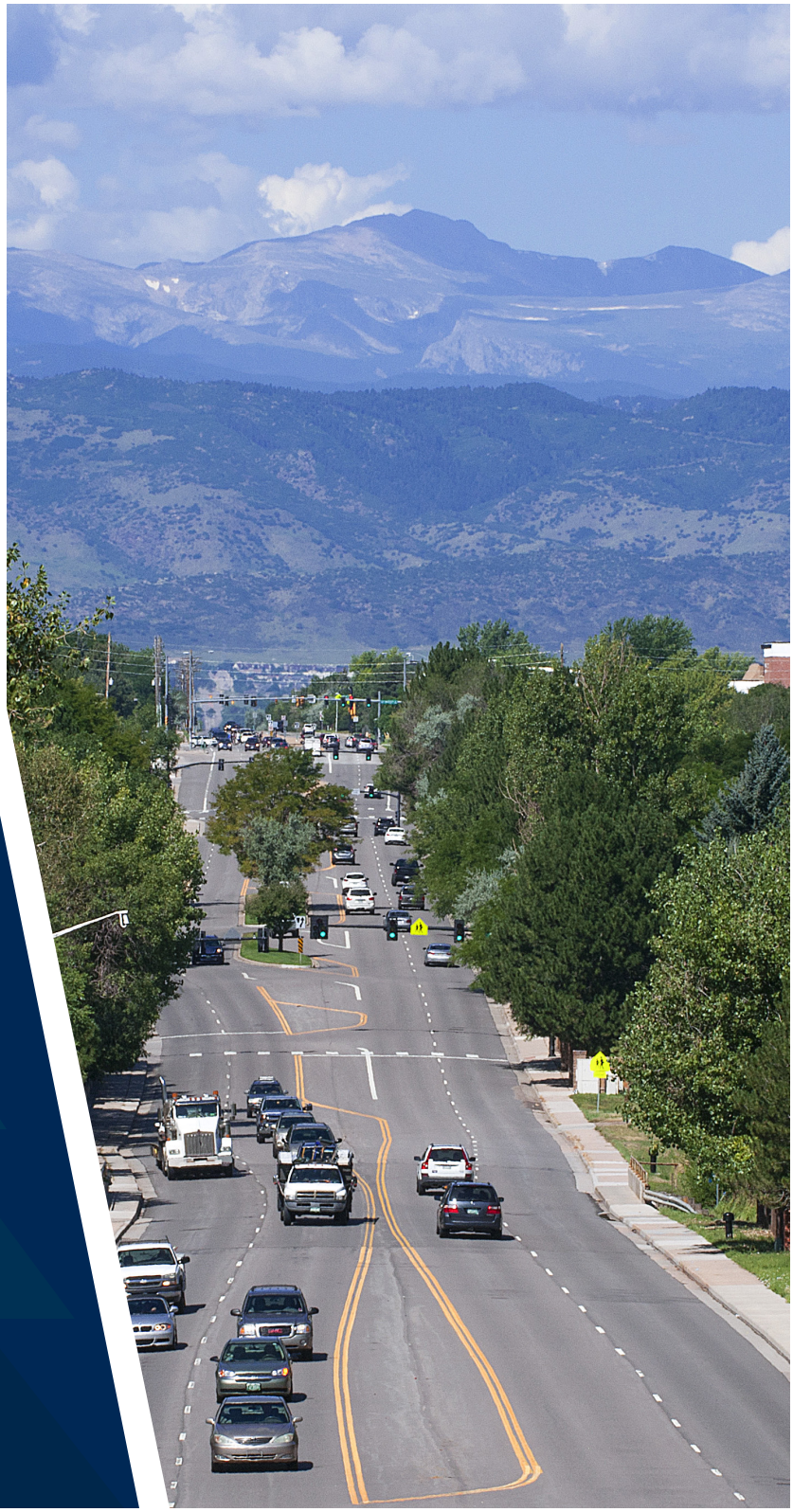

Centennial

PART I – POLICY

Page

SECTION 1.0 GENERAL PROVISIONS I-1

1.1 SCOPE I-1

1.2 AUTHORITY AND JURISDICTION I-1

1.3 PURPOSE I-1

1.4 AMENDMENT AND REVISIONS I-2

1.5 REVIEW AND APPROVAL I-2

1.6 INTERPRETATION I-2

1.7 ABBREVIATIONS & DEFINITIONS I-2

SECTION 2.0 SUBMITTAL REQUIREMENTS & PROCEDURES I-5

2.1 INTRODUCTION I-5

2.2 ENGINEERING DOCUMENTS RELATED TO A LAND USE CASE I-5

2.2.1 Land Use Applications I-5

2.2.2 Public Improvement Agreement I-5

2.2.3 Engineer's Cost Estimate I-5

2.2.4 Traffic Impact Study I-6

2.2.5 Construction Documents I-6

2.2.6 Permitting I-8

2.3 CONSTRUCTION DOCUMENTS RELATED TO CAPITAL IMPROVEMENTS I-8

2.3.1 Permitting I-8

2.4 CONSTRUCTION DOCUMENTS – GENERAL INFORMATION I-8

2.4.1 Drafting Standards I-8

2.4.2 Plan Revisions I-8

2.4.3 Field Changes I-9

2.5 Variances I-9

2.5.1 General I-9

2.5.2 Minimum Standards Variance I-9

2.5.3 Alternate Roadway Section Design Variance I-9

2.5.4 Submission of Request for Variance and Decision of the Director I-10

PART II – DESIGN

Page

SECTION 3.0 TRAFFIC IMPACT STUDY GUIDELINES II-1

3.1 Responsibility for Traffic Impact Studies II-1

3.2 Updated Traffic Impact Study Required II-1

3.3 Traffic Study Format II-2

3.3.1 Introduction II-2

3.3.2 Existing Conditions II-3

3.3.3 Proposed Site-Generated Traffic II-3

3.3.4 Future Conditions II-4

3.3.5 Proposed Improvements II-5

3.3.6 Recommendations II-7

3.3.7 Conclusions II-7

3.4 Revisions to Traffic Impact Study II-7

3.5 Traffic Study Checklist II-7

SECTION 4.0 ROADWAY DESIGN AND TECHNICAL CRITERIA II-10

4.1 Roadway Classifications II-10

4.1.1 Six-lane Principal Arterial with or without Bicycle Lanes II-10

4.1.2 Four-lane Arterial with Bike Lanes II-11

4.1.3 Major Collector II-12

4.1.4 Minor Collector II-13

4.1.5 Local – Commercial II-14

4.1.6 Local – Detached Walk/Attached Walk II-15

4.1.7 Private Streets II-16

4.2 Horizontal Design II-17

4.2.1 General II-17

4.2.2 Connectivity II-20

4.2.3 Horizontal Curves II-21

4.2.4 Intersections II-22

4.2.5 Off-site Design II-23

4.2.6 Sidewalks, Curb Ramps, and Driveways II-23

4.2.7 Cul-de-sacs II-24

4.2.8 Auxiliary Lanes (Acceleration and Deceleration Lanes) II-24

4.3 Vertical Design II-24
4.3.1 Permissible Roadway Grade II-25
4.3.2 Vertical Curves II-25
4.3.3 Changing Grades II-26
4.3.4 Intersections II-26
4.3.5 Connections with Existing Roadways II-27
4.3.6 Roadway Crown Cross-Slope II-28
4.4 Sight Distance Design II-28
4.4.1 Stopping Sight Distance II-28
4.4.2 Intersection and Driveway Sight Distances II-28
4.5 Access Management and Design II-28
4.5.1 General II-28
4.5.2 Criteria for Speed Change Lanes II-30
4.5.3 Design of Median Islands II-32
4.5.4 Design of Radii and Widths II-32
4.5.5 Vehicle Storage II-33
4.6 Bicycle Facilities II-33
4.7 Traffic Control Devices II-34
4.7.1 General II-34
4.7.2 Traffic Signing and Markings II-34
4.7.3 Traffic Signals II-35
4.8 Lighting and Utilities II-37
4.8.1 General II-37
SECTION 5.0 PAVEMENT DESIGN II-40
5.1 GENERAL II-40
5.2 PAVEMENT DESIGN REPORT SUBMITTAL OPTIONS II-40
5.3 FIELD INVESTIGATION II-40
5.3.1 Preliminary Design and Final Design Reports II-40
5.3.2 Design Confirmation Report II-40
5.4 LABORATORY TESTING II-40
5.4.1 Preliminary Design Report and Final Design Report II-40
5.4.2 Design Confirmation Report II-40
5.5 DESIGN REQUIREMENTS II-41
5.6 REPORT REQUIREMENTS II-41
5.6.1 Preliminary Design Report, Design Confirmation Report, and Final Design Report. II-41

LIST OF TABLES

Table 1: Design Sight Distance for Access Spacing.....II-17
Table 2: Arterial Roadways II-17
Table 3: Collector Roadways.....II-18
Table 4: Local Roadways II-19
Table 5: Private Streets II-20
Table 6: Redirect Tapers for Transitions II-21
Table 7: Design Vehicle per Roadway Classification II-23
Table 8: Vertical Design Criteria.....II-25
Table 9: Maximum Grades and Length of Grades at Intersection Approaches.....II-27
Table 10: Minimum Curb Return Fall.....II-27
Table 11: Curb Radii Access Design.....II-32

PART III – CONSTRUCTION AND INSPECTION

Page

SECTION 6.0 CONSTRUCTION PROCEDURES AND PRACTICES III-1

6.1 GENERAL III-1

6.2 DEMOLITION III-1

6.2.1 Demolition General III-1

6.2.2 Local Laws, Ordinances and Code III-1

6.2.3 Protection of Public, Onsite and Project Adjacent Improvements III-1

6.2.4 Disconnection of Existing Utilities III-2

6.2.5 Equipment Operated On Streets III-2

6.2.6 Protection of Survey Monuments III-2

6.2.7 Fences III-2

6.2.8 Trees and Shrubs III-2

6.2.9 Cesspools, Privies, Buried Fuel, and Septic Tanks III-3

6.2.10 Wells III-3

6.2.11 Buildings III-3

6.2.12 Slabs On Grade III-3

6.2.13 Walls III-3

6.2.14 Salvage III-3

6.2.15 Filling and Grading III-3

6.2.16 Topsoil III-3

6.3 HOUSEKEEPING, RESTORATION, AND CLEANUP III-4

6.3.1 Surplus Excavation III-4

6.3.2 Concrete Curb, Gutter, Valley Gutter, and Sidewalk III-4

6.3.3 Surface Restoration III-4

6.4 SOILS AND EARTHWORK III-5

6.4.1 Excavation, Embankment, and Compaction III-5

6.4.2 Utility Trenching, Backfill, and Bedding III-5

6.5 PAVEMENT III-6

6.5.1 General III-6

6.5.2 Procedure for Material Source Approval III-6

6.5.3 Violations of Approval Conditions III-7

6.5.4 Use of Materials not Listed in Section 1.1.5 ..... III-7

6.5.5 Material Specifications III-7

6.6 TRAFFIC CONTROL III-9
6.6.1 Traffic Control Devices III-9
6.6.2 After-Hours Traffic Controls III-9
6.6.3 Damage to Permanent Traffic Control III-9
6.6.4 Specific Requirements III-9
6.6.5 Flagpersons III-10
6.6.6 Traffic Signal Construction Standards III-10
6.7 TRAFFIC SIGNAGE AND PAVEMENT MARKINGS III-39
6.7.1 General III-39
6.7.2 Traffic Control Devices on Public Property III-39
6.7.3 Traffic Control Devices on Private Property III-39
6.7.4 Pavement Markings III-39
6.8 TRAFFIC SIGNAL POLES, PEDESTALS, AND MAST ARMS III-40
6.8.1 Controller Cabinet General III-40
6.8.2 Cabinet Design and Construction III-41
6.8.3 Terminals and Facilities/Main Panel Design and Construction III-43
6.8.4 Power Panel Design and Construction III-45
6.8.5 Auxiliary Cabinet Equipment III-45
6.8.6 Vehicle Detection III-46
6.8.7 Cabinet Test Switches and Police Panel III-47
6.8.8 Controller Telemetry Interface Panel III-47
6.8.9 Auxiliary Devices III-48
6.8.10 Testing and Warranty III-49
6.8.11 UPS Specifications III-50
6.8.12 Power Input/Output III-50
6.8.13 Run Time III-50
6.8.14 Indications, Alarms, Faults III-51
6.8.15 Switches, Ports, Receptacles, Controls III-51
6.8.16 Hardware, Software, Cabling III-52
6.8.17 Warranty III-52
6.8.18 Miscellaneous Hardware III-52
6.8.19 Paint – Signal Poles III-53
6.8.20 Instructions and Wiring Diagrams III-54
6.8.21 Radio Interconnect Communications III-54

SECTION 7.0 INSPECTION AND TESTING III-55

7.1 QUALITY CONTROL/QUALITY ASSURANCE III-55

7.2 CONSTRUCTION INSPECTION III-55

7.3 CONSTRUCTION TESTING III-55

SECTION 8.0 ACCEPTANCE PROCEDURES AND REQUIREMENTS III-56

8.1 ACCEPTANCE AND WARRANTIES III-56

8.2 RECORD DRAWINGS III-56

8.2.1 Requirements for Construction As-Built Plans III-56

Appendices

Standard Details

PART I
POLICY

TABLE OF CONTENTS

Page

SECTION 1.0 GENERAL PROVISIONS 1

1.1 SCOPE 1

1.2 authority and JURISDICTION 1

1.3 PURPOSE 1

1.4 AMENDMENT AND REVISIONS 2

1.5 REVIEW AND APPROVAL 2

1.6 INTERPRETATION 2

1.7 ABBREVIATIONS & DEFINITIONS 2

SECTION 2.0 SUBMITTAL REQUIREMENTS & PROCEDURES 5

2.1 INTRODUCTION 5

2.2 ENGINEERING DOCUMENTS RELATED TO A LAND USE CASE 5

2.2.1 Land Use Applications 5

2.2.2 Public Improvement Agreement 5

2.2.3 Engineer's Cost Estimate 5

2.2.4 Traffic Impact Study 6

2.2.5 Construction Documents 6

2.2.6 Permitting 8

2.3 CONSTRUCTION DOCUMENTS RELATED TO CAPITAL IMPROVEMENTS 8

2.3.1 Permitting 8

2.4 CONSTRUCTION DOCUMENTS – GENERAL INFORMATION 8

2.4.1 Drafting Standards 8

2.4.2 Plan Revisions 8

2.4.3 Field Changes 9

2.5 Variances 9

2.5.1 General 9

2.5.2 Minimum Standards Variance 9

2.5.3 Alternate Roadway Section Design Variance 9

2.5.4 Submission of Request for Variance and Decision of the Director 10

SECTION 1.0 GENERAL PROVISIONS

1.1 SCOPE

These regulations shall be known as the *City of Centennial Roadway Design and Construction Standards Manual 2016* (hereinafter referred to as the "Manual"). The *Arapahoe County Roadway Design and Construction Standards Manual 1986* previously adopted by the City of Centennial in 2001 is hereby superseded by this Manual. The City of Centennial is hereinafter referred to as the "City."

1.2 AUTHORITY AND JURISDICTION

1.2.1 **Home Rule Charter**. The City is a home rule municipality under Article XX, Section 6 of the Constitution. As such, the City's principal authority for adopting this Manual is the Home Rule Charter of the City of Centennial, adopted June 10, 2008, as may be amended from time to time.

1.2.2 **Colorado Statutes**. The provisions in this Manual are also authorized by the Colorado Revised Statutes, including, but not limited to:

1.2.2.1 Title 31, Article 15, Part 4, *Police Regulations*.

1.2.2.2 Title 31, Article 15, Part 7, *Public Property and Improvements*.

1.2.2.3 Title 43, Article 2, *State, County, and Municipal Highways*.

1.2.2.4 Title 31, Article 15, Part 7 of the State of Colorado and Title 31, Article 1, Section 202 of the Colorado Revised Statutes.

1.2.3 Jurisdiction.

1.2.3.1 The standards established in this Manual shall apply to all property under the City's regulatory authority within the corporate boundaries of the City.

Other Agency Review. The City does not provide water, sanitation, fire protection, and various other utilities and services. The agencies that provide these utilities and services are unaffiliated agencies with independent approval authority. The Develop is responsible for contacting all appropriate agencies to obtain their approval for all applications.

1.3 PURPOSE

This Manual presents the minimum design and technical criteria for analysis, design, and construction of roadway facilities. All proposed construction within the City shall meet or exceed these minimum criteria. Items not specifically addressed by the Manual shall follow the design recommendations in the the American Association of State Highway and Transportation Officials (AASHTO) *Policies on Geometric Design of Highways and Streets*, the Colorado Department of Transportation (CDOT) *Standard Construction Specifications for Road and Bridge Construction,* or the *Manual on Uniform Traffic Control Devices* (*MUTCD*), and other applicable standards approved by the Director.

1.4 AMENDMENT AND REVISIONS

This Manual may be amended administratively upon approval by the Director and annual ratification by the City Council.

1.5 REVIEW AND APPROVAL

The City shall review all submittals for general compliance to this Manual and other applicable City standards. Approval by the City does not relieve the Owner, Developer, or their designees from the responsibility of ensuring that the calculations, plans, specifications, construction, and record drawings are in compliance with the Manual as stated in the City acceptance block, available on the City's website. The City makes no warranty and accepts no liability that approved designs are consistent with national and state engineering best practices as this is the responsibility of the registered professional engineer stamping the plans and reports.

1.6 INTERPRETATION

In the interpretation and application of the provisions contained in this Manual, the following shall govern:

In their interpretation and application, these provisions shall be regarded as the minimum requirements for the protection of the public health, safety, and welfare of the residents of the City and infrastructure users. The Manual shall, therefore, be regarded as remedial and shall be liberally construed to further their underlying purposes.

Whenever a provision of the Manual and any other provisions of the law, ordinance, resolution, rule, or regulation of any kind contain any restrictions covering any of the same subject matter, whichever standards are more restrictive or impose higher standards or requirements shall govern. The Director of Public Works shall have final authority to resolve any conflict in the interpretation of the Manual.

The Manual shall not repeal or annul any public improvement construction plans or permits that have been filed with the City and/or approved before the effective date of the Manual, provided that the improvements will be constructed within one year from the date of plan approval. Public improvement construction plans or permits that have expired approvals (i.e., improvements have not been constructed within one year from the approval date) shall be required to be resubmitted in accordance with the requirements of this Manual.

1.7 ABBREVIATIONS & DEFINITIONS

For the purposes of the Manual, these abbreviations shall have the following meanings:

AASHTO	*American Association of State Highway and Transportation Officials*
AASHTO "GREEN BOOK"	*A Policy on Geometric Design of Highways & Streets*
ACI	*American Concrete Institute*
ADA	*Americans with Disabilities Act*
ADT	*Average Daily Traffic*
APWA	*American Public Works Association*

ASA	*American Standards Association*
ASTM	*American Society for Testing and Materials*
CD	*Site-Civil Construction Document*
CDOT	*Colorado Department of Transportation*
CIP	*Capital Improvement Program*
ECE	*Engineer's Cost Estimate*
FEMA	*Federal Emergency Management Agency*
FHWA	*Federal Highway Administration*
HCM	*Highway Capacity Manual*
IGA	*Intergovernmental Agreement*
IMSA	*International Municipal Signal Association*
ITE	*Institute of Transportation Engineers*
ITS	*Intelligent Transportation System*
LDC	*City of Centennial Land Development Code*
LED	*Light Emitting Diode*
LOS	*Level of Service*
MDS	*Microwave Data Systems*
MGPEC	*Metropolitan Government Pavement Engineers Council*
MUTCD	*Manual on Uniform Traffic Control Devices*
NACTO	*National Association of City Transportation Officials*
NEMA	*National Electrical Manufacturers Association*
NESC	*National Electrical Safety Code*
OSHA	*Occupational Safety and Health Administration*
PC	*Point of Curvature*
PCR	*Point of Curb Return*
PE	*Professional Engineer, Licensed in Colorado*
PI	*Point of Intersection*
PIA	*Public Improvement Agreement*
PT	*Point of Tangency*
ROW	*Right-of-Way*
RTD	*Regional Transportation District*
SEMSWA	*Southeast Metro Stormwater Authority*
THD	*Total Harmonic Current Distortion*
TIS	*Traffic Impact Study*
TSEA	*Traffic Signal Escrow Agreement*
UDFCD	*Urban Drainage and Flood Control District*
ULI	*Urban Land Institute*
UPS	*Uninterruptible Power Supply*
USGS	*United States Geological Survey*

References to external manuals, standards, and guides shall always imply the latest version or edition.

For the purposes of this Manual, these words shall have the following meanings:

City **–** The City of Centennial, Colorado, a municipal corporation, organized and existing under and by virtue of the laws of the State of Colorado.

City Project Manager **–** The City of Centennial staff member responsible for the oversight and management of a specific project, as defined at the time of project kickoff or his or her designee.

City Traffic Engineer **–** The head Traffic Engineer for the City of Centennial or his or her designee.

Contractor **–** The constructor of project elements acting on behalf of the Developer.

Developer **–** The applicant or permittee for development approval by the City. This term shall be inclusive of the Developer, his or her applicant, or his or her designee. This term shall also universally apply to any person or persons acting on behalf of the City for projects using these standards.

Director **–** Director of Public Works for the City of Centennial, Colorado, or his or her designee.

Planning & Engineering **–** A division of the City of Centennial Community Development Department.

Public Improvements **–** Generally includes improvements on City property or within City right-of-way (ROW) and landscaping installed in connection with a new development. The term also includes similar improvements being built in connection with a subdivision intended to be dedicated to the City.

Right-of-Way (ROW) **–** A general term denoting land, property, or interest therein, usually in a strip, acquired for or devoted to a street, highway, or other public improvement.

State **–** The State of Colorado or Colorado Department of Transportation.

SECTION 2.0 SUBMITTAL REQUIREMENTS & PROCEDURES

2.1 INTRODUCTION

The procedures outlined in the following section are guidance for Developers seeking approval of civil engineering reports and construction plans. Additional guidance on the land development processes and the associated application forms can be found on both the City's website and the Land Development Code (LDC).

2.2 ENGINEERING DOCUMENTS RELATED TO A LAND USE CASE

2.2.1 LAND USE APPLICATIONS

The Community Development Department conducts pre-submittal meetings at which time applicants may present their conceptual plan to the Planning & Engineering Staff for a cursory review. At this meeting, the applicant will be advised on the process required to develop in the City, the basic requirements and standards that apply, and the Engineering documents that are required. After this meeting, the applicant may begin the site plan process based on the information provided. The purpose of the process is typically for the applicant to obtain a development permit to allow construction of horizontal improvements for private development. For more information, refer to the LDC.

2.2.2 PUBLIC IMPROVEMENT AGREEMENT

When public improvements are required as a part of a development, the applicant shall enter into a Public Improvement Agreement (PIA) with the City. The PIA identifies the public improvements that are required to be constructed, stipulates the timing of the improvements and the warranties that will cover them, and provides the requisite assurances that the improvements will be constructed to the City's established standards. Details regarding the PIA can be found in Division 14-2 of the City's LDC, which governs the circumstances and procedures for the implementation of PIAs.

2.2.3 ENGINEER'S COST ESTIMATE

The ECE quantifies the cost of horizontal improvements related to a development, as estimated by the applicant's engineer. The ECE is comprised of three components and must be prepared by a professional engineer registered in the State of Colorado. Templates can be found on the City's website.

Public ECE: Outlines the cost of all surface and underground improvements located in existing and proposed public ROW and tracts dedicated to the City, as well as any landscape improvements, on-site or off-site.

Private ECE: Outlines the costs of all site improvements that will serve the project site exclusively and are located on private property. These costs include all surface improvements that are not included in the public improvements portion, exclusive of improvements associated with the project's building permit(s) (e.g., foundations, retaining walls, structures, improvements within the building, etc.).

Southeast Metro Stormwater Authority ECE: Outlines the costs of improvements that are under the jurisdiction of the Southeast Metro Stormwater Authority (SEMSWA). For more information on this document, please refer to SEMSWA standards.

The ECEs must be submitted as a part of the land use case. The Public ECE will be used to determine the amount of collateral required to be posted before release of the Development Permit in conjunction with the City's PIA. The Private ECE is required for use in the determination of Use Tax fees. SEMSWA uses the SEMSWA ECE in conjunction with its PIA. The Private, Public, and SEMSWA ECEs are used to determine the Use Tax fees associated with the Development Permit.

2.2.4 Traffic Impact Study

The City requires a traffic impact study (TIS) to adequately assess the impacts of a development proposal on the existing and/or planned street system. The primary responsibility for assessing the traffic impacts associated with a proposed development will rest with the Developer, with the City serving in a review capacity. Detailed guidance and requirements for traffic analysis and completion of the traffic study can be found in Part II, Section 3 of this Manual.

2.2.5 Construction Documents

Site Civil Construction Documents (CDs) may be submitted once there are no major outstanding issues on the Site Plan (this is up to the discretion of the review engineer). All CDs shall be prepared by or under the direction of a PE and shall be reviewed for the minimum requirements set forth herein and any other applicable City standards. The Developer should be aware that additional information and analysis, beyond the minimum requirements, may be required for a proposed project if unusual conditions or construction challenges are anticipated.

The Developer or his or her engineer should use the City's CD checklist, general notes, and standard signature block in preparing plans. These can be found on the City's website and must be included with the submittal. Applicants should work independently with the outside agencies, such as the fire, water, and sanitary sewer districts. CDs *are not* routed from the City to these agencies, but approvals from these agencies are required before site civil CD approval and Development and Building Permit issuance.

Electronic Submittals

In an effort to achieve greater efficiency in the review process, the City encourages electronic submittal packages for CD review. The applicant is responsible for providing an electronic file containing the project CD set. This electronic file should be in PDF format and should be compatible with current software in use by the City; this information is available on the City's website or by contacting Planning & Engineering staff. Prior to review, all CD review fees must be paid to the City in a manner approved by the Planning & Engineering staff.

Engineering Review of Construction Documents

The Planning & Engineering Division's objective is to issue the first round of comments CDs within 28 calendar days; however, the actual time required is a function of the submittal complexity and overall workload of the Planning & Engineering Division. Review times will be reduced with each resubmittal of

the same plan set, assuming review comments from the previous submittal have been adequately addressed. The applicant will be advised of the estimated completion date for review of submitted documents.

Once the Developer or his or her engineer has been notified that the Planning & Engineering Division has completed its review of the CD set, the applicant shall have 6 months to address all comments and redlines and resubmit a revised CD set. If the Planning & Engineering Division has not received a revised CD set by the end of this 6-month period, starting from the time that the applicant's engineer is notified that review has been completed, the CD application may be closed.

Any submittal received after the application is closed will be considered a new CD application and must be accompanied by review fees in the amount outlined in the Community Development Fee Schedule. At any time before the closing of a CD application, the Developer may submit a written request to extend the application's expiration date by 6 months; however, only one extension is allowed for any CD application.

Submitting Revised Plans

When submitting revised plans or reports to the Planning & Engineering Division, the resubmittal must contain:

1. The revised plans and/or reports
2. All redlines from previous staff reviews and a point by point response to staff comments
3. Additional review fees, if applicable
4. Any documents required by SEMSWA

If all the above items are not included with the package that is submitted, the resubmittal may be returned without further action until such time as they are included.

Construction Document Approval

City acceptance of the CDs constitutes Planning & Engineering Division review and acceptance of the final design concept shown on the CDs. Approval of the final CDs shall be completed before any Development Permit is issued but will not occur before final approvals of the associated Land Use Case and verification of approval from outside agencies (water, sanitary, fire, etc.).

Once the Planning & Engineering Division has accepted the plans and/or reports, the Developer's representative shall submit to the Planning & Engineering Division a minimum of 7 sets of full-size copies of the CDs and one electronic copy in PDF format. A PE must sign and stamp all 7 sets, with the electronic set digitally signed and sealed. The Planning & Engineering Division will approve CDs by signing all 7 sets.

One set of signed plans will be returned to the Applicant, three sets of signed plans shall be retained by the Planning & Engineering Division for City records, and one set of plans will be provided to the Contractor at the mandatory Pre-Construction meeting. The final two sets of signed plans shall be forwarded to SEMSWA for their records.

Plan Expiration

Approval of CDs expires after one year. If construction activity has not commenced within one year of the approval date, the applicant must resubmit the CDs as a new application accompanied by the required CD review fees as outlined in the Community Development Fee Schedule. Extensions may be granted at the discretion of the Director of Community Development for a period of one additional year.

2.2.6 PERMITTING

Once the Land Use Case process has been completed, all necessary documents have been approved, and outside agency approvals have been verified, the applicant may submit for a Development Permit. The Development Permit Application can be found on the City's website. Information on the development's General Contractor will be required. The General Contractor must be licensed and bonded in the City. More information on City licensing can be found on the City's website or by contacting the City Building Division.

After the Development Permit Application has been reviewed, approved, verified that the necessary fees, collateral, and documents have been received by the City, the Development Permit will be ready for issuance. The General Contractor is required to hold a Pre-Construction meeting with the City Engineering Inspector to obtain the Development Permit, approved CDs, and begin construction.

2.3 CONSTRUCTION DOCUMENTS RELATED TO CAPITAL IMPROVEMENTS

City CIPs vary greatly in size, scope, and complexity. The submittal requirements for CIP plans and specifications, including required documents, number of reviews, outside reviewers, etc., will be determined by the City's Project Manager and described within the Request for Proposals. A general list of plan requirements can be found in the Public Works *Construction Document Checklist*, available on the City's website, along with the Public Works project General Notes and Signature Block.

2.3.1 PERMITTING

All work within City ROW requires a City ROW Permit. Information on the ROW Permit process can be found in the *Public Works Department Right-of-Way Regulations*, available on the City's website.

2.4 CONSTRUCTION DOCUMENTS – GENERAL INFORMATION

2.4.1 DRAFTING STANDARDS

All plans submitted for approval shall be clear and legible and contain sufficient information so that a Contractor can reasonably be expected to complete construction using the plan set in conjunction with this Manual. Please refer to the Public Works CD Review Checklist on the City's website for the minimum required information to be included in the CD plan set. Plans shall be submitted as blackline drawings on 22" x 34" paper and in PDF format that will produce 22" x 34" sheets at the scale indicated on the drawings. The required CD template can be found on the City's website.

2.4.2 PLAN REVISIONS

Whenever updates or revisions to previously approved construction plans, specifications, or reports are necessary, the applicant will submit updates or revisions through the normal document submittal process.

After all the comments and revisions have been incorporated, full-size sets containing revisions may be submitted for approval by the applicant. This approval submittal shall meet requirements of Section 2.2.5 of this manual.

2.4.3 Field Changes

Minor changes to construction plans can be made in the field provided that the City Project Manager approves the changes prior to implementation. Failure to receive approval of field changes from the City Project Manager may result in non-acceptance of the improvements. All field changes must be accurately depicted on the record drawings as defined in Part III, Section 8.2 of this manual. The applicant shall provide to the Project Manager a letter, signed and sealed by the PE responsible for the original design, stating that the proposed field change shall not deviate from the intent of the original design, when applicable.

2.5 VARIANCES

2.5.1 General

Consideration may be given for variances from this Manual when appropriate and as long as the request for a variance complies with the provisions in this section. It is the sole responsibility of the Developer to request variances from this Manual in writing and provide supporting documentation, as outlined below. Approval of a variance will expire one year after the variance has been granted if CDs are not approved within that time frame, or at the time of CD expiration if approved.

Two types of variances may be considered. The first is a request to vary from the minimum standards described in this Manual (Section 2.5.2, Minimum Standards Variance). The second type is a request to vary from the standard roadway cross-section design (Section 2.5.3, Alternate Roadway Section Design Variance).

2.5.2 Minimum Standards Variance

The Director may authorize a Minimum Standards Variance if the applicant's request establishes that all conditions set forth below are satisfied.

1. The variance will result in a safe and high-quality design.
2. The variance will result in a design with a level of safety, service, and quality equal to or greater than that established by the criteria contained in this Manual.
3. The Developer will be able to mitigate all impacts to the City if the variance is granted.
4. The variance will create a benefit to the project that would not be achievable without the variance.

Satisfying the above-listed criteria does not require or obligate the variance request to be approved.

2.5.3 Alternate Roadway Section Design Variance

Proposed roadway sections should meet or match as closely as possible the standard roadway sections available in the City Standard Details. The Director may authorize an Alternate Roadway Section Design Variance if the Developer's request for a variance establishes that all of the conditions below are satisfied:

1. Existing conditions or restrictions cause use of the applicable standard roadway cross section to be unrealistic.

2. The proposed roadway cross section will result in a safe and high-quality design that is beneficial to the project and the City and not otherwise feasible using the applicable standard roadway cross section.

An Alternate Roadway Section Design Variance is limited to the typical cross section of the alternate design approved by the Director and will not include any other approvals including, but not limited to, access, roadway connections, or other roadway design or construction issues.

Satisfying the above-listed criteria does not require or obligate the variance request to be approved.

2.5.4 Submission of Request for Variance and Decision of the Director

It is the sole responsibility of the Developer to request variances from this Manual. The request for a variance must be made in writing to the Director and include therewith all supporting documentation necessary for the Director to make a decision. The Director may ask the Developer to submit additional material to support the variance request but is not required to seek additional material before making a decision. The Director shall have 28 days after receiving the request, unless such time is extended by the Director, to make a decision. The Director will issue a decision approving or denying the request for a variance in writing and send such decision to the Developer.

If approved, the variance will expire:

- One year after the date on which the variance was granted if CDs are not approved within that time frame; or
- At the time CD authorization expires if CDs have been approved.

If denied, the Developer may submit an appeal.

2.5.5 Variance Appeal Process

The City Manager will deliberate appeals according to the same standards that the Director was to apply to the original variance request. Variance appeals shall be submitted to the City Manager in writing no later than 14 days after the date on which the Director denied the variance request. Appeals submitted after that timeframe will not be permitted. The appeal must contain the following:

a. The original variance request and supporting documents

b. A brief statement describing how the variance denial violates the intentions of this Manual

Satisfying the above-listed criteria does not require or obligate the appeal request to be approved. No evidence that was not presented to the Director in the original variance application shall be presented to the City Manager. The decision of the City Manager will be final and is not subject to further appeal.

PART II
DESIGN

TABLE OF CONTENTS

Page

SECTION 3.0 TRAFFIC IMPACT STUDY GUIDELINES 1

3.1 Responsibility for Traffic Impact Studies 1

3.2 Updated Traffic Impact Study Required 1

3.3 Traffic Study Format 2

3.3.1 Introduction 2

3.3.2 Existing Conditions 3

3.3.3 Proposed Site-Generated Traffic 3

3.3.4 Future Conditions 4

3.3.5 Proposed Improvements 5

3.3.6 Recommendations 7

3.3.7 Conclusions 7

3.4 Revisions to Traffic Impact Study 7

3.5 Traffic Study Checklist 7

SECTION 4.0 ROADWAY DESIGN AND TECHNICAL CRITERIA 10

4.1 Roadway Classifications 10

4.1.1 Six-lane Principal Arterial with or without Bicycle Lanes 10

4.1.2 Four-lane Arterial with Bike Lanes 11

4.1.3 Major Collector 12

4.1.4 Minor Collector 13

4.1.5 Local – Commercial 14

4.1.6 Local – Detached Walk/Attached Walk 15

4.1.7 Private Streets 16

4.2 Horizontal Design 17

4.2.1 General 17

4.2.2 Connectivity 21

4.2.3 Horizontal Curves 22

4.2.4 Intersections 24

4.2.5 Off-site Design 25

4.2.6 Sidewalks, Curb Ramps, and Driveways 25

4.2.7 Cul-de-sacs 25
4.2.8 Auxiliary Lanes (Acceleration and Deceleration Lanes) 26
4.3 Vertical Design 26
4.3.1 Permissible Roadway Grade 27
4.3.2 Vertical Curves 27
4.3.3 Changing Grades 27
4.3.4 Intersections 27
4.3.5 Connections with Existing Roadways 28
4.3.6 Roadway Crown Cross-Slope 29
4.4 Sight Distance Design 29
4.4.1 Stopping Sight Distance 29
4.4.2 Intersection and Driveway Sight Distances 29
4.5 Access Management and Design 30
4.5.1 General 30
4.5.2 Criteria for Speed Change Lanes 31
4.5.3 Design of Median Islands 33
4.5.4 Design of Radii and Widths 34
4.5.5 Vehicle Storage 36
4.6 Bicycle Facilities 37
4.7 Traffic Control Devices 37
4.7.1 General 37
4.7.2 Traffic Signing and Markings 38
4.7.3 Traffic Signals 38
4.8 Lighting and Utilities 40
4.8.1 General 40
SECTION 5.0 PAVEMENT DESIGN 43
5.1 GENERAL 43
5.2 PAVEMENT DESIGN REPORT SUBMITTAL OPTIONS 43
5.3 FIELD INVESTIGATION 43
5.3.1 Preliminary Design and Final Design Reports 43
5.3.2 Design Confirmation Report 43
5.4 LABORATORY TESTING 43

5.4.1 Preliminary Design Report and Final Design Report 43
5.4.2 Design Confirmation Report 44
5.5 DESIGN REQUIREMENTS 44
5.6 REPORT REQUIREMENTS 44
5.6.1 Preliminary Design Report, Design Confirmation Report, and Final Design Report 44

LIST OF TABLES

Table 1: Design Sight Distance for Access Spacing II-17
Table 2: Arterial Roadways II-18
Table 3: Collector Roadways II-19
Table 4: Local Roadways II-20
Table 5: Private Streets II-20
Table 6: Redirect Tapers for Transitions II-21
Table 7: Design Vehicle per Roadway Classification II-24
Table 8: Vertical Design Criteria II-26
Table 9: Maximum Grades and Length of Grades at Intersection Approaches II-28
Table 10: Minimum Curb Return Fall II-28
Table 11: Curb Radii Access Design II-36

SECTION 3.0 TRAFFIC IMPACT STUDY GUIDELINES

This Section contains guidelines for conducting TIS's for submittal to the City. These guidelines have been established to ensure consistent and proper traffic planning and engineering practices when land development is being considered within the City. These guidelines provide a standard process, set of assumptions, set of analytic techniques, and presentation format to be used in the preparation of all TIS's submitted to the City.

3.1 RESPONSIBILITY FOR TRAFFIC IMPACT STUDIES

The TIS must adequately assess the impact of a development proposal on the existing and/or planned street system as outlined in Part I, Section 2.2.4.

The TIS may be waived if all of the following criteria are met:

1. The average trip generation of the project is less than 250 trips per day.
2. The proposed development's A.M. and P.M. peak hour trip generation will be less than 25 trips.
3. Access is not being requested to either a State highway or City arterial road.
4. The City has not identified any special circumstances that require further investigation through a TIS.

If these criteria are satisfied, a PE shall prepare a technical memorandum or brief letter report that includes the following:

1. The trip generation and distribution of the development
2. Supported conclusion that no transportation impacts are anticipated as a result of the proposed project

The City Traffic Engineer will review the technical memorandum or brief letter report for accuracy. The TIS may be waived if the City agrees that the information provided meets the minimum criteria for a waiver. If not, the City will formally request that a TIS be completed for the development.

If a TIS is required, the City will review the draft study data sources, methods, and findings and provide comments in a written form. The Developer and the Developer's engineer shall then have an opportunity to incorporate the necessary revisions before submitting a final report. The City must approve all studies before acceptance.

3.2 UPDATED TRAFFIC IMPACT STUDY REQUIRED

The Director or City Traffic Engineer may require an update or amendment to a previous traffic study or a new study if any of the following thresholds are met:

1. Changes to the development proposal increase the expected trip generation for daily or peak hour trips by more than 15 percent from the original study;
3. Previous traffic studies are more than 2 years old, unless the City Traffic Engineer has determined that the conditions have not significantly changed; or
4. The location, types, or number of access points for the development have changed.

If it is determined that an update or amendment is required, the Developer will be informed at the time of the Pre-submittal Meeting (required by Planning & Engineering), assuming that adequate information has been provided. If information provided at the Pre-submittal Meeting is inadequate, then the determination for an updated traffic study may be made during review of the first submittal of the Land Use Case.

3.3 TRAFFIC STUDY FORMAT

Traffic consultants are encouraged to discuss projects with the City Traffic Engineer in advance to establish study parameters. The discussion might include the study area boundary, design years, traffic count locations, directional distribution of traffic, intersections requiring operational analyses, and method for projecting future background traffic volumes. This should provide a firm basis of understanding and communication among the City, the owner or Developer, and their consultant in preparing a traffic study that comprehensively addresses the potential traffic impacts of the project. Specific requirements may vary depending on the size of the project, the type of project, and the site location. However, all traffic studies shall contain, at a minimum, the following information.

3.3.1 INTRODUCTION

1. Land Use, Site, and Study Area Boundaries

This section briefly describes the size of the land parcel, the general terrain features, the location within the City, and the region. This section should also identify the primary roadways within the study area.

The limits of the study area should be based on engineering judgment and an understanding of existing traffic conditions at the site. In all instances, however, the study area limits shall be mutually agreed upon by the Developer, the Developer's engineer, and City staff. A vicinity map that depicts the site in relation to the surrounding transportation system should be included.

2. Existing and Proposed Site Uses

This section should identify the existing and proposed uses of the site relative to the various zoning categories of the City and include the proposed site plan as a figure in the TIS.

3. Existing and Proposed Uses in the Vicinity of the Site

This section should include a complete description of the existing land uses in the vicinity of the site and their current zoning. The applicant should also identify, if known, any proposed uses for vacant lands adjacent to the site to anticipate any potential transitions in land use. This latter item is especially important where large tracts of undeveloped land are within the prescribed study area and could potentially have an impact on the adjacent transportation system.

4. Existing and Proposed Roadways and Intersections

This section should describe the existing roadways and intersections (laneage, intersection geometrics, and traffic control), as well as any known improvements contemplated by government agencies.

3.3.2 Existing Conditions

The TIS should discuss and graphically depict the following existing conditions:

1. Existing Average Daily Traffic (ADT) for streets within the established study area based on recent traffic counts. The appendix shall provide all raw traffic count data, including 24-hour ADT counts and peak hour turning movement counts. Daily traffic counts should be actual machine counts rather than factored peak hour counts. Available machine counts from CDOT, the City, and other agencies may be acceptable if not more than two years old.
2. Existing A.M. and P.M. peak hour movements for intersections within the study area based on recent traffic counts. Peak hour counts should include pedestrian movements. All intersection turning movement counts should be less than one-year old.
3. A figure depicting the existing study area traffic volumes.
4. Existing A.M. and P.M. peak hour levels of service (LOS) for all study area intersections. Include a figure summarizing the LOS results.

LOS is a qualitative measure of traffic operational conditions based on roadway capacity and vehicle delay. As defined by the *Highway Capacity Manual* (*HCM*), LOS ranges from A to F, with LOS A representing generally free-flow traffic and minimal delays, and LOS F representing congested conditions and long delays. LOS C will be the design objective for peak hour intersection operations, with LOS D being the minimum acceptable operational condition for a site plus background traffic. If a development will cause a roadway or an intersection to drop below LOS D, the City may require improvements. Refer to Section 3.3.5 for more information on possible improvement types.

The TIS shall include LOS analyses for the study area intersections and proposed site access driveways based on *HCM* methods. The evaluation should also consider pedestrian movements. The TIS appendix shall include LOS worksheets. Computer techniques and the associated printouts may be used as part of the report graphics. LOS calculations shall be performed for existing conditions, background conditions, and total traffic scenarios.

3.3.3 Proposed Site-Generated Traffic

Trip generation must be calculated for the maximum uses allowed under the existing and proposed zoning based on the latest data contained within the Institute of Transportation Engineers (ITE) *Trip Generation* manual. If published data are unavailable for a proposed land use, the City must approve the estimated rates or trip generation method before acceptance. Traffic volume counts for similar existing uses or additional sources from other jurisdictions may be acceptable to the City. The TIS should address the following, as applicable:

1. Trip Generation

A summary table listing the size and type of each proposed land use, the proposed size, the average trip generation rates that were used (total daily traffic, A.M. peak hours, and P.M. peak hours), and the resultant total site trip generation must be provided.

2. Pass-By Trips

Reductions to the site trip generation to account for pass-by traffic may be considered for commercial developments upon approval of the City. Data contained in ITE's *Trip Generation Handbook* may be used to estimate the pass-by attraction of a proposed development. Pass-by trips would reduce the development's impact on the adjacent roadways, but the site driveway volumes are not reduced. A separate traffic assignment may be needed to demonstrate the pass-by volumes.

3. Internal Capture

Internal trip reductions may be considered for mixed-use developments. The methodology presented in ITE's *Trip Generation Handbook* shall be used to calculate the internal capture potential. Justification for internal trip reductions shall be provided.

4. Transit Oriented Development

Trip reductions may also be considered for developments located along transit corridors or in close proximity to light rail stations. The methodology presented in ITE's *Trip Generation Handbook* shall be used to calculate the potential vehicle trip reductions associated with the availability of transit. Justification for transit reductions shall be provided.

5. Trip Distribution

The TIS must clearly state the estimated distribution of trips oriented to and from the proposed development by using the north, south, east, and west compass points and by the percent of assignment. Market studies and information concerning the origin of trip attractions to the proposed development may be used to support these assumptions when available. Traffic study graphic materials must include a figure showing the percentage of site traffic on each street.

6. Project-Generated Traffic Assignment

This section shall describe the use of the study area roadways by site-generated traffic. The TIS shall include a figure depicting the assignment. This section shall also address each phase of development, if applicable, and include associated figures.

3.3.4 Future Conditions

The evaluation of future conditions shall include the short-term, long-range, and any intermediate phases of development. Short-term background volumes include the existing traffic and the traffic projected at the proposed opening year of the development unless the City specifies a later scenario. Long-range background volumes are those volumes projected 20 years from the proposed opening year of the development. Intermediate phases may apply to plans that include more than one phase of build-out or other atypical circumstances, as determined by the Director of Public Works or City Traffic Engineer.

1. Short-Term Background Traffic Volumes

As noted previously, the short-term background volumes include the existing traffic and potential additional traffic projected at the proposed opening year of the development unless the City specifies a later scenario. Growth rates extracted from the regional travel demand model or as

specified by the City may be used. Imminent development of nearby parcels may also be included as determined by the City. The TIS shall include a figure depicting the short-term background volumes (daily, A.M. and P.M. peak hours).

2. Short-Term Background LOS

The TIS shall analyze the short-term background traffic operations using *HCM* methods and provide a figure summarizing the LOS results. LOS results for any intermediate future scenarios should also be provided.

3. Long-Range Background Traffic Volumes

20-year background traffic volume projections shall consider buildout of major vacant properties around the proposed development as defined by the City. The City may provide projections for background traffic growth or recommend a method for projecting future volumes. The TIS shall include a figure depicting the long-range background volumes (daily, A.M. and P.M. peak hours). The TIS should include intermediate future scenarios corresponding to each phase of development, as applicable.

4. Long-Term Background LOS

The TIS shall analyze the 20-year background traffic operations using *HCM* methods and provide a figure summarizing the LOS results. LOS results for any intermediate future scenarios should also be provided.

5. Total Traffic Volumes

The total traffic volumes are the sum of the background plus site-generated traffic volumes (daily, A.M. and P.M. peak hours). The TIS shall include figures depicting the short-term (existing plus site) and long-range (20-year background plus site) traffic volumes. Intermediate future horizons reflecting phases of development should also be provided, if applicable.

6. Total Traffic LOS

The TIS shall analyze the total traffic operations using *HCM* methods and include figures summarizing the results. Intermediate phases of development shall also be analyzed and appropriate figures included.

3.3.5 Proposed Improvements

This section will describe the location, nature, and extent of proposed improvements to assure sufficient intersection capacity (LOS D or higher). The improvements shall include planned projects by the City or CDOT for which funds have been appropriated and obligated.

1. Roadway Laneage

Potential roadway widening to include additional through lanes shall be identified.

2. Intersection Geometry

Geometric improvements at intersections, such as additional turn lanes or storage modifications to maintain acceptable LOS, shall be identified.

3. Traffic Control

Traffic control improvements at site accesses and study area intersections shall be identified. Where the need for traffic signals is identified, additional analyses are needed, as described in the following sections.

4. Signal Warrant Analysis and Signal Progression

The need for new traffic signals shall be identified based on warrants specified in the *MUTCD*. Traffic progression along arterials is of paramount importance; therefore, a spacing of one-half mile should be maintained for all signalized intersections along City arterial streets and State highways. This spacing typically provides good speed and optimum signal progression. If the one-half-mile spacing cannot be achieved, the TIS shall include a progression analysis to demonstrate that existing progression levels will be maintained.

The progression analysis shall be based on criteria contained in the *MUTCD, the Manual of Traffic Signal Design* (ITE), the *Traffic Control Devices Handbook* (ITE), or other recognized sources. The TIS appendix shall include time-space diagrams.

5. Accident Analysis and Safety Improvements

The study may require traffic accident data for affected street corridors . The study period shall normally be three years. Where this is necessary, estimates of increased or decreased accident potential shall be evaluated for the development. If the proposed development might impact existing traffic safety problems in the study area, then safety improvement recommendations may be necessary. The City Traffic Engineer will determine this at the time of TIS review.

6. Auxiliary Lanes

The need for acceleration or deceleration lanes at site accesses and affected street intersections shall be evaluated based on CDOT criteria for deceleration and storage. The TIS shall identify auxiliary lane improvements.

7. Shared Parking

Traffic studies for mixed-use developments where shared parking is contemplated shall be required to include parking accumulation studies for existing facilities similar to the proposed uses and for the surrounding uses with which parking is being reciprocated. The TIS may use available shared parking data from the Urban Land Institute (ULI), ITE, or other recognized source, as approved by the City.

8. Roundabouts

Where existing or future conditions indicate the potential for signalized traffic control, a roundabout may be a feasible alternative. When identified in the TIS or as directed by the City, existing and potential roundabout locations shall be analyzed using *HCM* methods.

3.3.6 RECOMMENDATIONS

If the analyses indicate unsatisfactory levels of service on study area roadways, recommendations for improvements to mitigate deficiencies shall be identified. In general, the recommendation section should include:

1. **Recommended Improvements**
   This section shall describe the location, nature, and extent of proposed improvements to assure sufficient roadway capacity. A conceptual layout of each improvement should be provided showing the dimensions of the pertinent geometric features of the proposed improvements. The concept sketches shall incorporate recommended signing and striping improvements.

2. **Recommendations on Phasing of Improvements**
   Where long-range improvements are not needed in the short term, a logical phasing plan shall be developed to implement the ultimate configuration. Necessary improvements must be directly tied to construction of a planned phase or a specific year.

3. **Traffic Volume Proportions**
   The City may require the percent share of total traffic volumes to determine the proportion of traffic using various public improvements (both existing and proposed) from several developments within the study area. This will assist the City in determining the appropriate allocation of improvement costs among the area developments.

3.3.7 CONCLUSIONS

The last chapter of the report must clearly and concisely summarize the proposed project, the study findings, and its recommendations. It is anticipated that the concluding chapter will serve as an executive summary.

3.4 REVISIONS TO TRAFFIC IMPACT STUDY

The City may require revisions to the TIS. The need for revisions will be based on the completeness of the TIS, adherence to City requirements, and compatibility of the TIS with the proposed access and development plan.

3.5 TRAFFIC STUDY CHECKLIST

The Engineer conducting the TIS should complete the following checklist to aid in completion of the report. The checklist may be included with TIS submittals to verify completion or to note items that were left out intentionally.

	TIS Elements	Yes	N/A	Comments
REPORT COVER				
1	Original and revision dates			
2	Dated, sealed, and signature of PE			
INTRODUCTION				
1	Study area boundary map (figure)			
2	Existing and proposed site uses and phasing (Include site plan with access points shown [figure])			
3	Existing and proposed uses in vicinity of site			
4	Existing and proposed roadways and intersections (figure)			
EXISTING CONDITIONS				
1	24-hour roadway counts < 2 years old			
2	Intersection peak hour counts < 1 year old			
3	Existing A.M., P.M., and daily traffic volumes (figure)			
4	Existing A.M. and P.M. peak hour LOS (figure)			
PROPOSED SITE GENERATED TRAFFIC				
1	Trip generation summary (table)			
2	Pass-by trips (provide justification)			
3	Internal trips (provide justification)			
4	Transit trip reductions (provide justification)			
5	Trip distribution (figure)			
6	Trip assignment (figure) – each phase			
FUTURE CONDITIONS				
1	Background traffic volumes (20-year and each phase) – Daily, A.M., and P.M. peak hours (figures)			
2	Background LOS (20-year and each phase) – A.M. and P.M. peak hours (figures)			
3	Total traffic volumes (short-term, long-range, and each phase) – Daily, A.M., and P.M. peak hours (figures)			
4	Total traffic LOS (short-term, long-range, and each phase) – A.M. and P.M. peak hours (figures)			
PROPOSED IMPROVEMENTS				
1	Roadway laneage			
2	Intersection geometry (including roundabouts)			
3	Traffic control			

TIS Elements		Yes	N/A	Comments
4	Signal warrant analysis and signal progression			
5	Accident analysis and safety improvements			
6	Auxiliary lanes			
7	Shared parking (provide justification)			
RECOMMENDATIONS				
1	Recommended improvements (provide sketches)			
2	Recommendations on phasing improvements			
3	Percent share of development traffic volumes			
CONCLUSIONS				
1	Summary of findings			

I HAVE REVIEWED THE ATTACHED REPORT WITH THIS CHECKLIST AND ALL THE REQUIRED ITEMS HAVE BEEN INCLUDED EXCEPT AS NOTED ABOVE _____ ENGINEER

SECTION 4.0 ROADWAY DESIGN AND TECHNICAL CRITERIA

4.1 ROADWAY CLASSIFICATIONS

The City is defined as an urban area and, as such, each of the following roadway classifications shall accommodate the characteristics of an urban environment. This section describes the hierarchy of each roadway type, the associated characteristics, and design criteria. The Standard Details section of the Appendix contains typical section details for the following roadway classifications.

Variances to the following may be allowed provided that the process outlined in Part I of this Manual has been followed and approval has been received, in writing, from the City. In all cases, access to abutting properties shall be at a grade with a slope no greater than 6%.

4.1.1 SIX-LANE PRINCIPAL ARTERIAL WITH OR WITHOUT BICYCLE LANES

A six-lane principal arterial is a roadway designed or operating typically with the following characteristics.

A. **SPEED LIMIT** – Posted speed limit less than or equal to 55 miles per hour (MPH).

B. **ACCESS** – Limited access to adjacent parcels of land. When access is allowed, each access should be separated at a minimum by a distance equal to the design sight distance values found in **Table 1**. Access width is the actual traveled portion of the access as it extends away from the roadway. The access width will be measured as described in Section 4 of the CDOT *State Highway Access Code*.

C. **TRAFFIC CONTROL** – Provided by traffic signals at major intersections.

D. **TRAFFIC VOLUMES** – More than 30,000 vehicles per day expected traffic volume when the land served by the arterial is fully developed.

E. **CONTINUITY** – Several miles, generally connecting with intercity routes.

F. **FUNCTION** – Permit rapid and relatively unimpeded traffic movement through the City, connecting major land use elements and the City with surrounding communities.

G. **RIGHT-OF-WAY WIDTH** – 154’ minimum.

H. **ACCESS CONDITIONS** –

   a. Intersections will generally be at-grade.
   b. Intersections will normally be located at one-quarter-mile intervals; at one-mile intervals if traffic signalization is projected, minimum.
   c. Traffic control devices shall control access from collector and arterial streets.
   d. Normally, abutting properties and local streets will not be allowed direct access to the street.

I. **TRAFFIC CHARACTERISTICS** – Movement of traffic controlled by traffic signals and channelization. Parking shall be prohibited. Roadways should have a raised median that separates traffic. Detached sidewalk is required.

J. **PLANNING CHARACTERISTICS** – Principal arterial streets spaced approximately one mile apart and traverse the entire City and/or county. Principal arterial streets should not bisect neighborhoods but should act as boundaries between them. Detached sidewalk is required. Other conditions may apply depending on the zone district (see LDC for requirements in the Activity Center and Urban Center districts).

K. **TYPE OF CURB AND GUTTER** – Vertical curb and gutter with detached 8' sidewalk and 10' landscape area required.

L. **STREET WIDTHS** – Six 12' travel lanes; 26' median; two 1' median gutter pans, two 2' gutter pans; two 5' bike lanes, if required; plus, necessary left turn, acceleration/deceleration lanes, and 4' median at intersections (114' flowline –flowline). At intersections the cross section can be modified to accommodate turn lanes. The City shall approve intersection cross sections.

4.1.2 Four-lane Arterial with Bike Lanes

A four-lane arterial is a street designed or typically operating with the following characteristics. Alternate cross sections may be allowed upon approval of the City Engineer.

A. **SPEED LIMIT** - Posted speed limit less than or equal to 50 MPH.

B. **ACCESS** – Limited access to adjacent parcels of land. When access is allowed, each access should be separated at a minimum by a distance equal to the design sight distance values found in **Table 1**. Access width is the actual traveled portion of the access as it extends away from the roadway. The access width will be measured as described in Section 4 of the *State Highway Access Code*.

C. **TRAFFIC CONTROL** – Provided by traffic signals at major intersections.

D. **TRAFFIC VOLUMES** – Fewer than 30,000 vehicles per day expected traffic volume when the land served by the arterial is fully developed.

E. **CONTINUITY** – Several miles, generally connecting with intercity routes.

F. **FUNCTION** – Permit relatively unimpeded traffic movement and intended for use on routes where four moving lanes and one left-turn lane are required but where a principal arterial cross-section would not be warranted.

G. **RIGHT-OF-WAY WIDTH** – 104' minimum.

H. **ACCESS CONDITIONS** –

a. Intersections at grade.

b. Intersection with other streets will not be restricted.
c. Access from a street of lower classification will be permitted but, in all cases, will be controlled with traffic control devices.
d. Abutting property will be allowed access to the street if no other access is available.

I. **TRAFFIC CHARACTERISTICS** – Regulation of traffic accomplished by signs and channelization. Traffic signals may be located at intersections where warrants are met. Parking shall be prohibited.

J. **PLANNING CHARACTERISTICS** – Arterials should be spaced from one-half to one mile apart and should, where possible, be continuous. Arterials should act as boundaries between neighborhood areas. Arterial cross sections should be used where traffic demands are high and ROW acquisition costs are not prohibitive. Detached sidewalk is required. Other conditions may apply depending on the zone district (see LDC for requirements in the Activity Center and Urban Center districts).

K. **TYPE OF CURB AND GUTTER** – Vertical curb and gutter with detached 6' sidewalk and 10' landscape area required.

L. **STREET WIDTHS** – Four 12' travel lanes; one 8' striped median; two 2' gutter pans; two 5' bike lanes plus acceleration/deceleration lanes at intersections (70' flowline – flowline). At intersections the cross section can be modified to accommodate turn lanes. The City shall approve intersection cross sections.

4.1.3 Major Collector

A major collector is a roadway designed or operated typically with the following characteristics. Alternate cross sections are allowed by approval of the City Engineer.

A. **SPEED LIMIT** – Between 30 and 35 MPH.

B. **ACCESS** – Access may be granted to adjacent parcels of land. Residential driveways will not be permitted. When access is allowed, each access should be separated at a minimum by a distance equal to the design sight distance values found in **Table 1**. Access width is the actual traveled portion of the access as it extends away from the roadway. The access width will be measured as described in Section 4 of the *State Highway Access Code*.

C. **TRAFFIC CONTROL** – Provided by traffic signals or roundabouts; side street control by stop signs.

D. **TRAFFIC VOLUMES** – Fewer than 15,000 vehicles per day when the land served by the collector is fully developed. Designed to handle traffic volumes loading from and onto local streets, other collectors, and arterial roadways.

E. **CONTINUITY** – 2 or more miles.

F. **FUNCTION** – Permit relatively unimpeded traffic movement and intended for use on those routes where two moving lanes are required but where a higher classified street is not warranted.

G. **RIGHT-OF-WAY WIDTH** – 78' minimum.

H. **ACCESS CONDITIONS** –

a. Intersection at-grade.
b. Intersection with other streets will not be restricted.
c. Access from a street of lower classification will be permitted but in all cases will be controlled with traffic control devices.
d. Normally, abutting property will be allowed access to the street and will front (or face) the street but perhaps with increased setback requirements.

I. **TRAFFIC CHARACTERISTICS** –

a. Regulation of traffic accomplished by signs and channelization.
b. Traffic signals normally located only at intersections with streets of equal or higher classification.
c. Parking shall be prohibited.

J. **PLANNING CHARACTERISTICS** –

a. Major collector streets should be used where traffic demands are high and ROW acquisition costs are not prohibitive.
b. Detached sidewalk required except at intersections.
c. Design elements (trees, open space, etc.) are recommended and required in some instances (see LDC). Other conditions may apply depending on the zone district (see LDC for requirements in the Activity Center and Urban Center districts).

K. **TYPE OF CURB AND GUTTER** – Vertical curb & and gutter with detached 6' sidewalk (except at intersections) and 8' landscape area required.

L. **STREET WIDTHS** – Two 12' travel lanes, 12' painted median, two 2' gutter pans and two 4' bike lanes (48' flowline – flowline). At intersections, the cross section can be modified to accommodate turn lanes. The City shall approve intersection cross sections.

4.1.4 Minor Collector

A minor collector is a general term denoting a roadway designed or operating with the following characteristics. Alternate cross sections may be allowed upon approval of the City Engineer.

A. **SPEED LIMIT** – Between 25 and 30 MPH.

B. **ACCESS** – Access to adjacent parcels of land. Residential driveways will not be permitted. When access is allowed, each access should be separated at a minimum by a distance equal to the design sight distance values found in **Table 1**. Access width is the actual traveled portion of the access as it extends away from the roadway.

C. **TRAFFIC CONTROL** – Generally provided by roundabouts or stop signs.

D. **TRAFFIC VOLUMES** – Fewer than 8,000 vehicles per day. Designed to handle traffic volumes loading from and onto local streets, other collectors, and arterial roadways.

E. **CONTINUITY** – Less than 2 miles.

F. **FUNCTION** – Collect and distribute traffic between arterial and local streets and serve as main connector routes within communities, linking one neighborhood with another. Traffic carried by collector streets should have an origin or a destination within the community.

G. **RIGHT-OF-WAY WIDTH** – 64' minimum.

H. **ACCESS CONDITIONS** –

a. Intersections at-grade with direct access to abutting property permitted.
b. Intersection with other streets permitted, but traffic-control devices should be used when warrants are met.

I. **TRAFFIC CHARACTERISTICS** – Regulation of traffic accomplished through the use of stop signs and channelization. Traffic signals may be used at intersections with major collectors and arterial streets when warranted.

J. **PLANNING CHARACTERISTICS** – Collector streets should have continuity throughout a neighborhood but need not extend beyond the neighborhood. Intersections with minor collectors, major collectors, and arterial streets should be at least one-quarter mile apart. Parking is permitted and will add 6' to each side of the roadway. Other conditions may apply depending on the zone district (see LDC for requirements in the Activity Center and Urban Center districts).

K. **TYPE OF CURB AND GUTTER** – Vertical curb & and gutter with detached 5' sidewalk and 8' landscape area required.

L. **STREET WIDTHS** – 24' paved plus two 2' gutter pans and two 4' bike lanes (36' flowline – flowline). At intersections the cross section can be modified to accommodate turn lanes. The City shall approve intersection cross sections.

4.1.5 Local – Commercial

A local-commercial is a roadway designed or operating typically with the following characteristics. Alternate cross sections may be allowed upon approval of the City Engineer.

A. **SPEED LIMIT** – 25 to 30 MPH.

B. **ACCESS** – All adjacent parcels of land that meet spacing requirements.

C. **TRAFFIC CONTROL** – Provided by stop signs where warranted.

D. **TRAFFIC VOLUMES** – Generally, fewer than 3,000 vehicles per day; designed to handle traffic volumes to and from local and collector roadways.

E. **CONTINUITY** – Short distances.

F. **FUNCTION** – Designed for the safety of pedestrians and bicyclists and the ease of access to adjacent parcels of land.

G. **RIGHT-OF-WAY WIDTH** – 60' minimum.

H. **ACCESS CONDITIONS** –

a. Intersection with other streets will not be restricted, but traffic-control devices should be used when warrants are met.

I. **TRAFFIC CHARACTERISTICS** – Regulation of traffic accomplished through the use of stop signs and channelization.

J. **PLANNING CHARACTERISTICS** – Local - commercial streets should be used to connect commercial parcels to collectors and arterials. Parking is permitted on the roadway. Other conditions may apply depending on the zone district (see LDC for requirements in the Activity Center and Urban Center districts).

K. **TYPE OF CURB AND GUTTER** – Mountable curb and gutter with detached 5' sidewalk and 7.5' landscape area preferred.

L. **STREET WIDTHS** – 28' paved plus two 2'-10" mountable curb and gutter (32' flowline – flowline). Sidewalks required, detached preferred. The cross section can be modified at intersections to accommodate turn lanes. The City shall approve intersection cross sections.

4.1.6 Local – Detached Walk/Attached Walk

A local street is a general term denoting a residential roadway designed or operating with the following characteristics. Alternate cross sections may be allowed upon approval of the City Engineer.

A. **SPEED LIMIT** – 20 to 30 MPH.

B. **ACCESS** – All adjacent parcels of land, specifically residential, as long as spacing requirements are met.

C. **TRAFFIC CONTROL** – Provided by stop signs, yield signs, or ROW rules for uncontrolled intersections.

D. **TRAFFIC VOLUMES** – Up to 1,000 vehicles per day.

E. **CONTINUITY** – Short distances.

F. **FUNCTION** – Designed for the safety of pedestrians and bicyclists and the ease of access to adjacent parcels of land.

G. **RIGHT-OF-WAY WIDTH** –50' minimum with attached walk, otherwise 60' minimum with detached walk.

H. **ACCESS CONDITIONS** –

a. Access to abutting properties shall be at-grade.
b. Intersection with other streets will not be restricted, but traffic-control devices should be used when warrants are met.

I. **TRAFFIC CHARACTERISTICS** – Regulation of traffic accomplished by using signage where warranted.

J. **PLANNING CHARACTERISTICS** – Local streets should be used to connect commercial and/or residential parcels to collectors and arterials. Parking is permitted on the roadway. Other conditions may apply depending on the zone district (see LDC for requirements in the Activity Center and Urban Center districts).

K. **TYPE OF CURB AND GUTTER** – Mountable curb and gutter is permitted. 5' sidewalk with 8' landscape area preferred.

L. **STREET WIDTHS** –28' paved with two 2' gutter pans (32' flowline – flowline).

4.1.7 Private Streets

The following conditions apply when private streets are constructed. Alternate cross sections may be allowed upon approval of the City Engineer.

A. Private streets may be allowed in certain cases, subject to City approval.

B. Private streets must meet the same standards for pavement structural section as a public street in an area of comparable density and traffic volume. Concrete sidewalk, curb and gutter, or drainage pans on the edge of streets will be required.

C. The width of private streets will vary according to the density and traffic impact of each site. Required street widths will be determined after appropriate TIS review through the City's Planning & Engineering Division.

D. Appropriate signage clearly indicating to the public and private providers that the street is private property must be permanently maintained at the entrance to the private street system.

E. The Developer of the private street system must submit the portion of the covenant, declaration, and/or by-laws of the homeowner association agreement that clarifies the private responsibilities for the private street system (maintenance, policing, lighting, drainage and signals, maintenance of common open spaces, etc.) for "approval as to form" by the City Attorney's Office through the

Planning & Engineering Division. This information may alternatively be indicated as a stipulation on the Development Plan or the Subdivision Plat. This information must be approved at the time of the approval of the final plat, rezoning, or site plan, as appropriate.

F. Any traffic control devices proposed for the private street system, such as signs, signals, markings, speed control mechanisms, etc., will be subject to review and approval by the City.

G. Street construction plans for private streets will require City approval.

H. Gating of private streets is discouraged but may be permitted subject to City approval. Gating of public streets is prohibited.

I. Private streets must meet the requirements of all applicable State and national standards (*MUTCD*, ADA, etc.).

Table 1: Design Sight Distance for Access Spacing

Posted Speed (MPH)	25	30	35	40	45	50	55
Design sight distance (in feet)	150	200	250	325	400	475	550
Minimum sight distance (in feet)	150	200	225	275	325	400	450

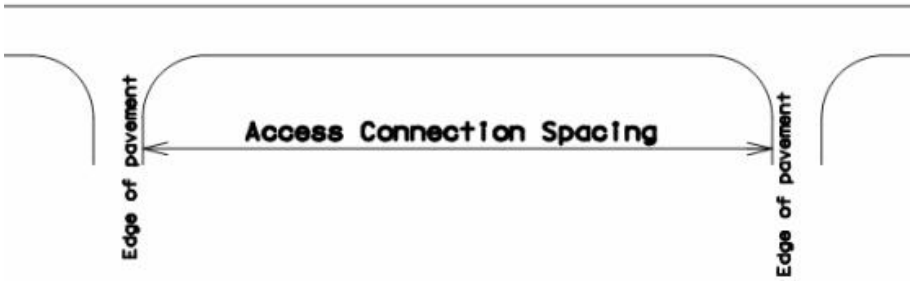

4.2 HORIZONTAL DESIGN

4.2.1 GENERAL

The following criteria for roadway design outline the minimum requirements; however, exceeding the minimum design criteria should be considered.

Table 2: Arterial Roadways

Criteria	Six-Lane Principal Arterial with Bicycle Lanes	Six-Lane Principal Arterial without Bicycle Lanes	Four-Lane Arterial
Design Speed	60 MPH	60 MPH	55 MPH
Traffic Volumes	> or = 30,000 vehicles per day	> or = 30,000 vehicles per day	< 30,000 vehicles per day
Minimum ROW	154' Minimum	144' Minimum	104' Minimum
Total Through Lanes	6	6	4
Travel Lanes	12'	12'	12'
Bike Lane Width	5'	N/A	5'
Raised Median (including curb and 1' gutter pan)	26'	26'	8' or Painted
Painted Median	N/A	N/A	8' or Raised
Curb and Gutter	6" vertical with 2' Gutter	6" vertical with 2' Gutter	6" vertical with 2' Gutter
Parking Lane	N/A	N/A	N/A
Landscape Strip (each side)	9'	9'	10'
Sidewalk, Curb, Gutter	Detached 8' Sidewalk	Detached 10' Sidewalk	Detached 6' Sidewalk
Curb Return Minimum Radii **-Intersect Arterial** **-Intersect Collector** **-Intersect Local**	 50' 40' ----	 50' 40' ----	 50' 40' ----
Superelevation Roadway	3%	3%	2%
Superelevation Landscape/Walkways/etc.	2%	2%	2%
Minimum Radius of Curve at Centerline Per AASHTO	1,190'	1,190'	1,190'
Maximum Grade of Intersection **-Intersect Arterial** **-Intersect Collector** **-Intersect Local**	 1–2% 1–3% ----	 1–2% 1–3% ----	 1–2% 1–3% ----
Min-Max Street Gradient	1–6%	1–6%	1–6%

Table 3: Collector Roadways

Criteria	Major Collector	Minor Collector
Design Speed	40 MPH	35 MPH
Traffic Volumes	< 15,000 vehicles per day	< 8,000 vehicles per day
Minimum ROW	78’ Minimum	64’ Minimum
Total Through Lanes	2	2
Travel Lanes	12’	12’
Bike Lane Width	4’	4’
Painted Median	12’	N/A
Curb and Gutter	6” vertical with 2’ Gutter	6” vertical with 2’ Gutter
Landscape Strip (each side)	8’	8’
Sidewalk, Curb, Gutter	Detached 5’ Sidewalk	Detached 5’ Sidewalk
Curb Return Minimum Radii **-Intersect Arterial** **-Intersect Collector** **-Intersect Local**	 40’ 40’ ----	 40’ 40’ 30’
Superelevation Roadway	2%	2%
Superelevation Landscape/Walkways/Etc.	2%	2%
Minimum Radius of Curve at Centerline Per AASHTO	533’	250’-371’
Maximum Grade of Intersection **-Intersect Arterial** **-Intersect Collector** **-Intersect Local**	 1–3% 1–3% 1–4%	 1–3% 1–3% 1–4%
Min-Max Street Gradient	1–6%	1–6%

Table 4: Local Roadways

Criteria	Local – Commercial	Local – Detached Walk/Attached Walk
Design Speed	35 MPH	35 MPH
Traffic Volumes	< 3,000 vehicles per day	< or = 1,000 vehicles per day
Minimum ROW	60' Minimum	50' Minimum (attached walk) 60' Minimum (detached walk)
Total Through Lanes	2	2
Travel Lanes	26'Drive Lane	20' Drive Lane
Curb and Gutter	Mountable Curb and 2' Gutter	Mountable Curb and 2' Gutter
Parking Lane	6' or N/A	6'
Landscape Strip (each side)	7.5'	8', N/A
Sidewalk, Curb, Gutter	Detached 5' Sidewalk	Detached 5' Sidewalk, Attached 5' Sidewalk
Curb Return Minimum Radii **-Intersect Arterial** **-Intersect Collector** **-Intersect Local**	 ---- 30' 20'	 ---- 30' 20'
Superelevation Roadway	2%	2%
Superelevation Landscape/Walkways/Etc.	2%	2%, N/A
Minimum Radius of Curve at Centerline Per AASHTO	250'–371'	250'–371'
Maximum Grade of Intersection **-Intersect Arterial** **-Intersect Collector** **-Intersect Local**	 ---- 1–4% 1–4%	 ---- 1–4% 1–4%
Min-Max Street Gradient	1–6%	1–6%

NOTE: All private streets criteria shall be determined at a Pre-Submittal Meeting and approved by the Director or City Traffic Engineer.

All private commercial driveways with curb return radii shall have a maximum grade of 6%, with the length of the maximum grade for the commercial driveway a minimum of 50' measured from the flowline intersection of the public roadway.

4.2.2 CONNECTIVITY

Proposed subdivision streets must be in continuous alignment with existing, planned, or platted streets with which they are to connect.

Arterial, collector, and local streets (if not ending in a cul-de-sac) must extend to the boundary lines of the land being developed. Proposed streets with widths different from existing streets to which they are being connected must be transitioned using City pavement transition taper standards specified in **Table 5**. Long, straight residential streets longer than 1,300' are conducive to high-speed traffic and are strongly discouraged.

Table 5: Redirect Tapers for Transitions

Posted Speed in MPH	30 or less	35	40	45	50	55
Straight Taper Ratio	15:1	20:1	30:1	45:1	50:1	55:1

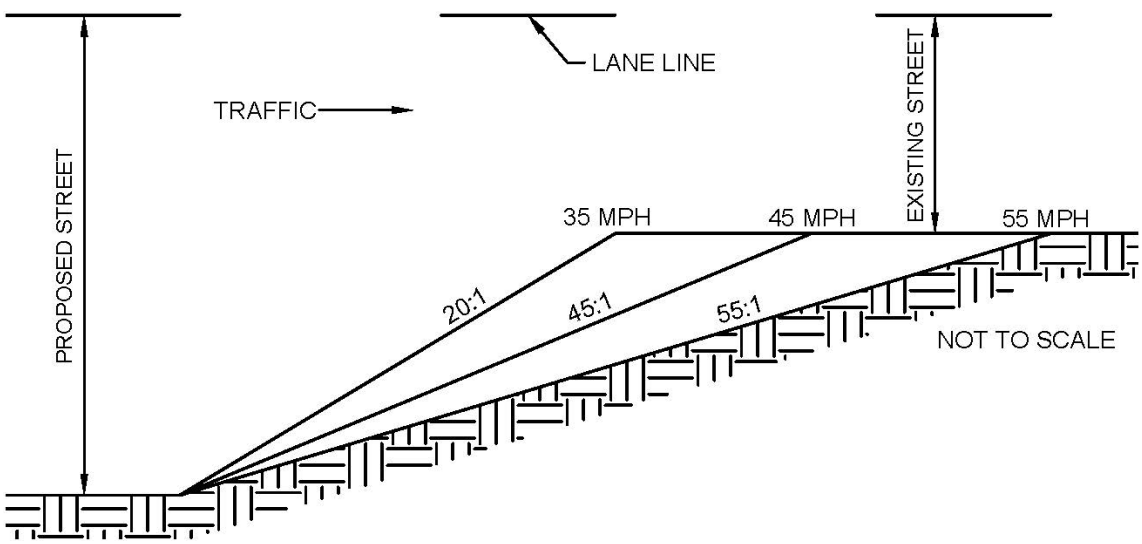

At the connection of two local streets with 90° alignments, where the connecting curve is less than the minimum 150-foot radius, the outside flowline may be required to be flared. Additional pavement width may be required on horizontal curves on collector and arterial streets to provide vehicle maneuvers where no superelevation is provided and where the minimum horizontal curve design criteria in **Table 2** through

Table 4 have not been met. The method of calculation for the widening will be as described in the *AASHTO "GREEN BOOK."*

Existing roadways, including planned or platted roadways, in adjoining property shall be continued with equal characteristics and in similar alignment and name with roadways proposed in the subdivision.

4.2.3 Horizontal Curves

The minimum horizontal curvature for roadway alignment shall be set in accordance with **Table 2** through

Table 4 located in Section 4.2.1. For unique or unusual circumstances, the *AASHTO "GREEN BOOK"* design guidelines should be considered, and the City shall approve any variance from the design criteria.

4.2.3.1 Superelevation

Superelevation shall be applied to curves on all roadway classifications of arterial designation in which it is required for the roadway to function properly. Horizontal curve radii and superelevation shall be in accordance with the requirements detailed in this Manual and on the recommendations of the *AASHTO "GREEN BOOK."*

The use of superelevation shall be avoided on all roadways with a design speed of 40 MPH or less. If superelevation cannot be avoided on a roadway with a design speed of 40 MPH or less, all design criteria within these standards and recommendations of the *AASHTO "GREEN BOOK"* shall apply.

4.2.3.2 Roadway End Terminus

Whenever roadways terminate due to project phasing, subdivision boundaries, etc., barricades are required to indicate and warn users of roadway termination. Design and construction shall comply with the requirements of the *MUTCD*. Details shall be shown on the construction drawings, and installation shall be provided by the Developer.

4.2.3.3 Small Deflection Angles

For small deflection angles, curves should be sufficiently long enough to avoid the appearance of a kink. Curves should be at least 500' long for a central angle of 5°, and the minimum length should be increased 100' for each 1° decrease in the central angle. Horizontal curves should not be used when the central angle is 59 minutes or less. This criterion applies to arterial roadway design only.

4.2.3.4 Compound Curves

A compound curve on arterials should be avoided, particularly where a simple curve can be obtained at a small extra cost. Where topography makes their use necessary, the radius of the flatter curve should not be more than 50 percent greater than the radius of the sharper curve. When this is not feasible, an intermediate curve or a spiral should be used to provide the necessary transitions. Spiral curves are to be used only upon written approval of the City.

4.2.3.5 Reversing Curves

True reversing curves should not be used. In cases of reversing curves, a sufficient tangent should be maintained to avoid overlapping of the required superelevation runoff and tangent runout. The following are the minimum tangent lengths that shall be used for each roadway classification:

1. Local – 100' minimum.
2. Collector – 100' minimum.
3. Arterial –150' minimum.

4.2.3.6 Broken-Back Curves

Broken-back curves are undesirable and should not be used. Alternatively, simple curves, compound curves, or spiral transition should be used to provide some degree of continuous superelevation. Design shall follow the *AASHTO "GREEN BOOK."* Spiral curves are to be used only upon written approval of the City.

4.2.3.7 Alignment at Bridges

Ending a curve on a bridge is undesirable and adds to the complication of design and construction. Likewise, curves beginning or ending near a bridge should be placed so that no part of the spiral, if allowed, or superelevation transition extends onto the bridge. Compound curves on a bridge are equally undesirable. If curvature is unavoidable, every effort should be made to keep the bridge within the limits of the simple curve.

4.2.3.8 Coordination with Vertical Alignment

To avoid the possibility of introducing traffic hazards, coordination is required between horizontal and vertical alignment. Particular care must be exercised to maintain proper sight distance at all times. Sharp horizontal curves introduced at or near the top of pronounced crest or bottom of sag vertical curves should be avoided.

4.2.4 INTERSECTIONS

4.2.4.1 General

Whenever possible, intersections shall be made at right angles (90°) or radial to a curve. No intersecting angle of less than 80° will be allowed without approval of the City.

The design vehicle shall be set by the roadway classification. **Table 6** identifies design vehicle requirements per roadway classification. Changes to desired design vehicles will be approved by the City Traffic Engineer and may require a traffic analysis justification.

Table 6: Design Vehicle per Roadway Classification

Roadway Classification	Desired Design Vehicle
Six-Lane Principal Arterial with Bicycle Lanes	WB-67
Six-Lane Principal Arterial Without Bicycle Lanes	WB-67
Four-Lane Arterial	WB-67
Major Collector	WB-62
Minor Collector	WB-62
Local – Commercial	WB-62
Local – Detached Walk / Attached Walk	SU-30

4.2.4.2 Minimum Curb Return Radii

Refer to **Table 2** through

Table 4 in Section 4.2.1 of Part II for minimum curb return radii per street classification.

4.2.5 Off-site Design

The design grade and the existing ground at that design grade of all roadways that dead-end due to project phasing, subdivision boundaries, etc., shall be continued, in the same plan and profile as the proposed design, for at least 500' or to its intersection with an arterial roadway. This limit shall be extended to 1,000' when arterial roadways are being designed.

4.2.6 Sidewalks, Curb Ramps, and Driveways

Sidewalks and/or bicycle paths shall be constructed on both sides of all roadways as depicted in the typical sections found in the Standard Details and required by the LDC unless otherwise approved by the City.

At least one ADA accessible route shall be provided within a site from accessible parking spaces and accessible passenger loading zones; public streets and sidewalks; and public transportation stops to the accessible building or facility entrance they serve.

When widening an existing sidewalk, it shall be completely removed and replaced with a new sidewalk at full width. Existing sidewalks shall not be widened by adding to the back of the walk.

All curb ramp designs shall meet the latest ADA design guidance, and ADA compliance supersedes the Standard Details. Curb ramps shall be constructed in accordance with the drawings found in the Standard Details. Curb ramps shall be shown on all curb returns on the development plans and must be shown (located) on all "T" intersections. Whenever referencing a curb ramp, the specific City Standard Detail shall be identified.

Drainage structures shall not be placed in line with curb ramps. The location of curb ramps shall take precedence over the location of drainage structures. Any underground structure set behind the curb that has an access lid shall not have the lid placed within the ramp portion of a curb ramp.

Residential driveways should not be used for commercial/industrial or high-volume residential development access. In general, when the number of parking spaces within a residential development serviced by the driveway exceeds 10, radius returns should be used.

4.2.7 Cul-de-sacs

The following criteria shall be used for cul-de-sac horizontal geometry (see the Standard Details).

A. The minimum property line radius shall be 60'.

B. The minimum flowline radius shall be 48'.

C. The maximum length of the cul-de-sac as measured along the center line, from extended property lines on the open end to the farthest side of the circumference of the turnaround, shall be 500'. Length may be increased only with specific approval of the City for special circumstances.

D. Vertical alignment shall be in accordance with Section 4.3.

4.2.8 Auxiliary Lanes (Acceleration and Deceleration Lanes)

The design of street systems depends on the proper control of access to developments. The location and design of access points must minimize traffic hazards and interference to through traffic movements. An analysis memorandum or TIS is required to determine the use of auxiliary lanes on non-arterials. The City Traffic Engineer shall approve their use. To ensure proper control, the following standards for acceleration and deceleration lanes have been established for arterial roadways.

Right and left turn lanes from arterial streets shall have a minimum of 150' of storage length and 150' of transition taper regardless of projected turning movements. Additional storage length may be required depending on the volume of turn movements and should be discussed in the traffic memo or TIS. The CDOT *State Highway Access Code* should be consulted for further details on auxiliary lanes.

4.3 VERTICAL DESIGN

Table 7 lists the criteria set forth as the minimum design standards for vertical roadway design. For additional guidance, refer to the *AASHTO "GREEN BOOK"*.

Table 7: Vertical Design Criteria

Roadway Classification	Design Speed (MPH)*	Maximum Grade (%)**	K Values*** (Length=K times Algebraic Difference in Grades)			
			Crest Vertical Curves		Sag Vertical Curves	
			Calculated	Design	Calculated	Design
Six-Lane Principal Arterial with Bike Lanes	60	6	150.6	151	114.9	115
Six-Lane Principal Arterial without Bike Lanes	60	6	150.6	151	114.9	115
Four-Lane Arterial	55	6	113.5	114	114.9	115
Major Collector	40	6	43.1	44	63.4	64
Minor Collector	35	6	29	29	49.0	49
	30	6	18.5	19	36.4	37
Local – Commercial	35	6	29	29	49.0	49
	30	6	18.5	19	36.4	37
Local – Detached Walk / Attached Walk	35	6	29	29	49.0	49
	30	6	18.5	19	36.4	37

Notes:

* The design speed is a minimum of 5 MPH over the posted speed for each classification.

** The maximum design grades should be used only in extreme topographic conditions. The designer should strive to minimize the use of these grades for considerable lengths and on north-facing slopes.

*** K Values exceeding 125 on curbed streets should be checked for drainage. Multiple inlets may be required within long sag vertical curves and where the longitudinal slope is less than 0.4 percent.

4.3.1 Permissible Roadway Grade

Grades and vertical sight distance are subject to approval by the City to ensure proper drainage and/or safety for vehicles and pedestrians. Grades of streets must not be less than 1.0%. Streets must follow the criteria listed in **Table 7**. The designer may modify the City standards when matching to existing conditions or under extreme circumstances with approval from the City.

4.3.2 Vertical Curves

When the algebraic difference in grade (A) is at, or exceeds, 0.004 ft./ft., a vertical curve is to be used. All vertical curves shall be symmetrical. The minimum gradients into and out of a sag (sump) vertical curve is 0.005 ft./ft.. All vertical curves shall be labeled in the profile with length of curve (L), K=L/A values, vertical points of curvature, tangent and intersection (VPC, VPT, VPI), and stationing and elevation of these components. In addition, the low point or high point of the vertical curve shall be shown. Streets must follow the criteria listed in **Table 7**.

4.3.3 Changing Grades

Using grade breaks in lieu of vertical curves is discouraged. However, if a grade break is necessary and the algebraic difference in grade does not exceed 0.004 ft./ft. along the roadway, the grade break will be permitted. The maximum grade break allowed at the point of tangency at a curb return for local and collector roads shall be 2 percent and a maximum of 1 percent for arterial roadways.

4.3.4 Intersections

The following criteria shall apply at intersections:

A. The grade of the "through" or main street shall take precedence at intersections. At the intersection of roadways with the same classification, the more important roadway, as determined by the City Traffic Engineer, shall have this precedence. The design should warp side streets to match through streets with as short a transition as possible.

B. The key criteria for determining the elevation of the curb return on the side street and the amount of warp needed on a side street transitioning to a through street are:

1. Permissible grade at the stop/start lane. See Section 4.3.4.1 of this Manual.
2. Pavement cross-slope at the point of curve return (PCR) on the side street and permissible warp in pavement cross slope. See Section 4.3.6 of this Manual.
3. Normal vertical curve criteria.
4. Vertical controls within the curb return itself.
5. Drainage considerations.

C. The elevation at the PCR of the curb return on the through street is always set by the grade of the through street in conjunction with pavement cross-slope.

D. Carrying the crown at a side street into the through street is permitted only when drainage considerations warrant such a design.

E. A more detailed review shall be performed for arterial-arterial intersections to maximize drivability. A few arterial intersections will have a uniform 2 percent cross-slope, the majority of them having one or more sides warped.

4.3.4.1 Permissible Intersection Grades (Public Rights-of-Way)

Table 8 shows the maximum permissible grade at intersections. These grades are maximum instantaneous profile or centerline grades for the stated distances (each side of the street) for the intersecting street. When the cross section varies, the maximum instantaneous grades are based off the centerline.

Table 8: Maximum Grades and Length of Grades at Intersection Approaches

Intersection of:	Local	Collector	Arterial	Maximum Grade
Local Street with	35’	100’	100’	4%
Collector Street with	100’	100’	200’	3%
Arterial Street with	125’	200’	200’	2%

The intersection grade of the major (through) street at the intersection may be dictated by design considerations for the street.

4.3.4.2 Curb Returns

Minimum fall around curb returns for flow along the curb line shall be as follows:

Table 9: Minimum Curb Return Fall

Radius	Minimum Fall
20’	0.3’
25’	0.4’
30’	0.4’
50’	0.5’
All Others	1.2 % Around Return

4.3.4.3 Curb Return Profiles

Curb return profiles are required for radii equal to or greater than 30’ within the public ROW. A mid-point elevation along the arc length of the curb return shall be shown in plan view for radii equal to or greater than 25’. All curb return profiles must assure positive drainage.

4.3.5 CONNECTIONS WITH EXISTING ROADWAYS

A. Connections with existing roadways shall be smooth transitions conforming to normal vertical curve criteria if the algebraic difference in grade between the existing and proposed grade exceeds 0.004 ft./ft.. When a vertical curve is used to make this transition, it shall be fully accomplished before the connection with the existing roadway and shall also comply with the grade requirements at intersection approaches.

B. Existing grade shall be shown for at least 300' on the roadway plan and profile within the CDs.

C. Previously approved designs for the proposed improvement are not an acceptable means of establishing existing grades. However, they are to be referenced on the construction plan where they occur.

4.3.6 Roadway Crown Cross-Slope

Except at intersections or where superelevation is required, roadways shall be level from top of curb to top of curb (or flowline to flowline) and shall have a minimum 2 percent crown. The cross section shall be standard except where physical geometry does not allow it.

Where cross-slope transitioning at intersections is required, the rate of change in pavement cross slope shall not exceed 1% every 25' horizontally on a local roadway, 1% every 37.5' horizontally on a collector roadway, or 1% percent every 56.5' horizontally on an arterial roadway.

4.4 SIGHT DISTANCE DESIGN

4.4.1 Stopping Sight Distance

Sight distance and stopping sight distance shall be in accordance with the requirements detailed in Chapter 3 of the *AASHTO "GREEN BOOK"*.

4.4.2 Intersection and Driveway Sight Distances

4.4.2.1 Sight Triangle

At the intersection of two streets, sight distance shall be evaluated across a "sight triangle" where obstructions are restricted according to the following criteria. Within the area of the triangle, there must be no wall, fence, sign, foliage, berming, or other structures that will obscure the driver's view of traffic approaching that intersection. For a structure, foliage, or berm to be allowed within the sight distance triangle, refer to the LDC for guidance (see Figure 12-11-208A of the LDC). Exceptions to this requirement exist for public facilities such as fire hydrants, utility poles, and traffic control devices. These facilities must be located to minimize visual obstruction and are subject to City approval.

To evaluate the sight distances at an intersection, refer to Standard Drawing SD-17. The sight distance triangle in this case is formed by the intersection of two lines plotted along a 10' offset of the flowline of the intersecting streets using the lengths specified in the detail. The diagonal connects the other ends of those lines. Where one or the other of the intersecting streets/driveways has no curb, the lines are plotted along the edge of the traveled way.

Other sight distance lines should be considered and shall be applied in accordance with the recommendations of the *AASHTO "GREEN BOOK".*

4.5 ACCESS MANAGEMENT AND DESIGN

4.5.1 GENERAL

The City must approve the design, number, and location of access points when the use of any property or its access operation is changed. The number of access points must be kept to a minimum. No access points will be approved without a site plan. The following information is presented as general guidelines for the location of access points to the public street system:

A. Access Points: Access Points will not be approved for parking or loading areas that require backing maneuvers in a public street ROW except for single family or duplex residential uses on local-residential streets.

B. Provision of Access: If a property has frontage on more than one street, access will be permitted to the lower classification of roadway or only on those street frontages where standards contained herein and the LDC can be met. If a property cannot be served by any access point meeting these standards, the City will approve one or more access point(s) based on traffic safety, operational needs, and conformance to as many of the requirements of these guidelines as possible.

C. Restriction of Turning Movements: Where necessary for the safe and efficient movement of traffic, the City may require access points to provide only limited turning movements. The restriction of turning movements will not affect the number and location of access points as specified elsewhere.

D. Number of Access Points: Generally, one access point per property ownership will be permitted, unless a site plan or traffic study approved by the City shows that additional access points are required to adequately handle driveway volumes, will not be detrimental to traffic flow on adjacent public streets, and is approved by the City Traffic Engineer or designee. Temporary access may be granted to undeveloped property before development of a final site plan if access is needed for construction or preliminary site access. Temporary accesses are subject to removal, relocation, or redesign after final site plan approval and require a ROW permit before installation or use.

E. Joint Access: Joint access shared by adjacent properties is encouraged. Joint access must be considered for two adjacent developments where a proposed new access will not meet the spacing requirement set forth in Section 4.1.

F. Abandoned Accesses: Existing driveways, even if not in use, must not be relocated, altered, or reconstructed without approval from the City.

G. Spacing and Width: Access spacing and width standards are described in Section 4.1. Each access should be separated by a minimum distance equal to the design sight distance values. Where accesses are in closer proximity than the distances shown, joint access must be considered. Access

spacing on State highways is subject to the provisions of Section 4 of the *State Highway Access Code*.

H. Alignment: A new or relocated access shall align with an access on the opposite side of the roadway. Where lots are not large enough to allow accesses on opposite sides of the street to be aligned, the center of driveways not in alignment will normally be offset a minimum of 150' on all collector and commercial/multi-family local streets; 300' on all arterials. Greater distances may be required as determined by left turn storage lanes. Minimum sight distance must be provided at all access points as described in Section 4.1**,** which applies to both public street and private access intersections. The City must approve exceptions to this section. Access locations must intersect a public street at 90° or as close to 90° as topography permits (no less than 80°).

I. Access Classification: The access classification should be determined by using the *City of Centennial Transportation Plan* roadway designations and then determining the corresponding access classifications.

4.5.2 Criteria for Speed Change Lanes

For City streets, speed change lanes will be required according to the following unless a variance is obtained from the City waiving these provisions.

4.5.2.1 Deceleration Lanes for Right Turning Vehicles

A right turn deceleration lane is required when any one or more of the following criteria is met:

A. When the access volumes meet or exceed 25 peak hour trips for roadways with speeds of 25 to 40 MPH or 20 peak hour trips for roadways with speeds in excess of 40 MPH.

B. Where the peak hour volume of the right turn into the access is more than 5 and the outside lane peak hour volume exceeds 250 on 45 to 55 MPH roadways, 450 on 35 to 40 MPH roadways, or 600 on a 25 to 30 MPH roadway a right turn deceleration lane may be required due to high traffic volumes or other unique site-specific safety considerations. The TIS should discuss this, and the City Traffic Engineer will determine final requirements.

C. Where an access will be frequented by large trucks, a right turn deceleration lane may be required to avoid frequent slowing of traffic. The TIS should discuss this, and the City Traffic Engineer will determine final requirements.

4.5.2.2 Acceleration Lanes for Right Turning Vehicles

A right turn acceleration lane is required when any one or more of the following criteria is met:

A. The City may require a right turn acceleration lane for any access where a high traffic volume on the roadway and lack of gaps in traffic makes use of acceleration necessary for vehicles to enter the roadway traffic flow through the use of merging techniques. This should be discussed in the TIS and final requirements will be determined by the City Traffic Engineer.

B. A right turn acceleration lane will not normally be required when the posted speed is less than 40 MPH. The City may require an acceleration lane where necessary for public safety and traffic operations based on site-specific conditions. The City Traffic Engineer will determine this requirement.

C. Where the peak hour volume of the right turn movement out of the access is less than 15 for roadways with speeds of 45 MPH and above or less than 30 for roadways with speeds of 40 MPH, an acceleration lane may not be required unless specifically necessary due to safety considerations. The City Traffic Engineer will determine this requirement.

4.5.2.3 Deceleration Lanes for Left Turning Vehicles

A left turn deceleration lane is required when the following is met:

A. The need for and use of a left turn deceleration lane is site specific. Factors such as highway speed, access volume, nearby access, existing highway auxiliary lanes, traffic control devices, available stopping sight distance, and other topographic and highway design factors are very influential. The TIS should discuss this, and the City Traffic Engineer will determine the final requirements.

4.5.2.4 Acceleration Lanes for Left Turning Vehicles

A left turn acceleration lane is required when any one or more of the following criteria is met:

A. The need for and use of a left turn acceleration lane is site specific. Factors such as highway speed, access volume, nearby access, existing highway auxiliary lanes, traffic control devices, available stopping sight distance, and other topographic and highway design factors are influential. A left turn acceleration lane may be required if the City determines that the lane would benefit roadway safety and operation. The City Traffic Engineer will determine this requirement.

B. Left turn acceleration lanes may not be required when (1) the posted speed is below 40 MPH unless required for public safety by the City Traffic Engineer, (2) the intersection is signalized, or (3) the acceleration lane would interfere with left turn ingress movement to any other access.

4.5.2.5 General Speed Change Lane Criteria

A. Speed change lanes shall be included on public roadways if the access will have a large percentage of vehicles exceeding 30,000 lbs. gross vehicle weight. Speed change lanes are required in the interests of public safety. Refer to the *AASHTO "GREEN BOOK"* for additional design criteria per roadway classification.

B. When high left turning volumes, safety, or traffic operations necessitate, the City may require double left turn design.

C. If the design of an access is within two different speed zones, the criteria for the higher speed zone will apply.

D. Speed change lanes are required if the specific site conditions pose traffic safety concerns.

E. Where there are three or more through lanes in the direction of travel, the requirement for right turn acceleration and deceleration lanes may be dropped. Each case will be reviewed independently and a decision made based on site specific conditions. Generally, turn lanes will be required only for a high volume access or where a specific geometric safety problem exists.

F. When calculating the roadway single lane design hour volume, it will be assumed that all lanes have equal volumes.

G. On City arterial streets, accesses will generally require provision of speed change lanes. On collector/commercial local streets, requirement of right turn speed change lanes will be determined on a case-by-case basis. Left turn speed change lanes must be provided on all City streets as required herein.

4.5.3 Design of Median Islands

Chapter 9, Section 9.7 of the *AASHTO "GREEN BOOK"* provides design criteria for median islands. Acceleration and deceleration lanes may be required to be incorporated into the design. See **Section 4.5.2** for additional requirements on acceleration and deceleration lanes. Islands to be owned and maintained by the City must be provided with vertical curb and cover material per Standard Detail SD-10. Landscaped medians may be permissible if documentation designating the entity to maintain the medians is provided, considered sufficient, and approved by the City.

Additional ROW or easements may be required to accommodate median design. The ends of the islands should typically be provided with 2' flowline radii. Where Site Plans do not permit installation of islands on accesses to restrict left turn movements, the City may permit installation of a center median on the adjacent street as an alternative.

Roadway medians shall comply with the widths in **Table 2** through

Table **4** for each roadway classification. Figures 9-4A through 9-7C in Chapter 9 of the *AASHTO "GREEN BOOK"* for roadway median details. Additional details can be found in Chapter 4 and Chapter 9 of the *AASHTO "GREEN BOOK*".

4.5.4 Design of Radii and Widths

Generally, all new private property accesses will be designed as drive cuts or with curb returns as noted in

Table 10. Residential driveways shall be designed as illustrated in the Standard Details and comply with the most recent ADA standards. All radii are quoted in feet as measured along the flowline or edge of pavement where no flowline exists. These standards apply to accesses on State highways and City streets.

Table 10: Curb Radii Access Design

Road Classification	Single Family/Duplex	Commercial/Office/ Multi-Family	Industrial
Residential Local	Driveway[1]	Driveway or 15' Radius	Driveway or 30' Radius
Commercial Local/ Multi-Family/Minor Collector	N/A	20' Radius[3]	30' Radius[3]
Major Collector	N/A[2]	25' Radius[3]	30' Radius[3]
Arterial	N/A[2]	30' Radius[3]	30' Radius[3]

Notes:

1. Mountable curb is required.
2. New single family/duplex accesses shall be to a local-residential public or private streets only.
3. Curb return radii are required on arterial and collector streets unless site constraints prevent their use.

4.5.5 Vehicle Storage

When a development is located adjacent to a public street, the parking facility must have full internal vehicular circulation and storage. Vehicular circulation must be located completely within the property, and vehicles within one portion of the development must have access to all other portions without using the adjacent street system.

Where a proposed development includes a truck loading operation and has access to a public street, adequate space must be provided such that all truck maneuvering and storage/parking is performed off street unless waived by the City.

Adequate reservoir capacity must be provided for both inbound and outbound vehicles to facilitate the safe and efficient movement between the street and the development. Inbound vehicle storage areas must be of sufficient size to ensure that vehicles will not obstruct the adjacent street, sidewalk, or circulation within the facility. Outbound vehicle storage areas must be provided to eliminate backup and delay of vehicles within the development.

The following requirements for vehicle storage in parking lots and at drive-up type facilities are based on a typical vehicle length of 20'.

4.5.5.1 For Accesses Serving Off-Street Parking Lots

Recommended distances from the flowline of the street to the first parking stall or aisle for a parking lot design are presented in the LDC and were developed by the City to provide a storage area for outbound vehicles exiting a parking lot. Vehicle storage equivalent to the distances shown in the LDC must be provided at accesses serving the site. The recommended vehicle storage area needed for the entire site may be distributed, proportional to anticipated driver desire, among several accesses if more than one

access serves the site. The recommended distance may be further adjusted by the City for accesses with two approach lanes and will be subject to traffic impact study findings, roadway geometry, traffic volumes, and site layout.

4.5.5.2 For Various Commercial Uses

The LDC summarizes the vehicle storage area that must be provided for various commercial uses. These storage areas must be:

1. Based on a vehicle spacing of 12' by 20'
2. Separated from normal parking circulation aisles
3. Designed using the appropriate design vehicle turning template

4.6 BICYCLE FACILITIES

All roadways, except those where cyclists are legally prohibited, should be designed and constructed under the assumption that they will be used by cyclists. Therefore, bicycles should be considered in all phases of transportation planning, new roadway design, roadway reconstruction, capacity improvement, and transit projects.

Research continues to provide additional criteria for the design of appropriate bicycle facilities. The selection of a bicycle facility may depend on many factors, including vehicular and bicycle traffic characteristics, adjacent land use, and expected growth patterns. The National Association of City Transportation Officials (NACTO) Urban Bikeway Design Guide should be used for general guidance in the design of bicycle facilities. Signs, signals, and pavement markings for bicycle facilities presented in the *MUTCD* should be used in conjunction with *The Guide for the Development of Bicycle Facilities, 4th Edition* by *AASHTO 2012* where an urban design guide may not apply. General striping details can be found in the City Standard Details.

4.7 TRAFFIC CONTROL DEVICES

4.7.1 GENERAL

4.7.1.1 Definition

Traffic control devices shall be defined as documented by Federal Highway Administration (FHWA) in the *MUTCD*. In general, traffic control devices include all signs, object markers, delineators, pavement markings, traffic signals, and other devices that are used to regulate, warn, or guide traffic.

4.7.1.2 Traffic Control Devices on Public Property

The Developer will generally install all permanently fixed traffic control devices for the City at the Developer's expense. The City Traffic Engineer must approve the installation of the traffic control devices, which shall be in conformance with Part III of this Manual.

4.7.1.3 Traffic Control Devices on Private Property

The property owner shall install and maintain all traffic control devices on private property.

A traffic design plan that specifies the proposed location, configuration, and type of all proposed traffic control devices shall be submitted to the City within site-civil CDs for approval.

4.7.2 Traffic Signing and Markings

4.7.2.1 General Requirement

The design, placement, size, operation, and uniformity of all traffic signing and markings shall be in conformance with the *MUTCD* and the supplemental *Standard Highway Signs and Pavement Markings* publication by the FHWA.

4.7.2.2 Signs

The placement and mounting height of all traffic signs shall conform to the City Standard Details.

All sign supports and materials shall conform to the latest City Standard Details.

The City shall approve the layout for any non-standard (custom) regulatory, warning, or guide signs, within public ROW.

4.7.2.3 Markings

All pavement marking lines, words, and symbols (i.e., color, width, spacing, dimensions and typical layouts) shall conform with the latest City of Centennial Standard Details and CDOT Standard Plans.

All pavement marking materials shall conform with the latest City Specifications.

4.7.3 Traffic Signals

4.7.3.1 General Standard

The design, placement, operation, and uniformity of all traffic signals shall be in conformance with the *MUTCD*.

All traffic signal poles, foundations, heads, controllers, cabinets, detectors, conductors/cables (wiring), conduit, pull boxes and other associated equipment shall conform with the latest City Standards and Specifications.

4.7.3.2 Signal Poles

Traffic signal-light poles with mast arms shall be provided for all new traffic signal installations unless specified otherwise by the City. Traffic signal-light poles shall conform with the latest City Standards and Specifications and the latest AASHTO *Standard Specifications for Structural Supports for Highway Signs, Luminaires, and Traffic Signals*.

The length of a traffic signal mast arm, at a minimum, shall extend to the center of the leftmost turn lane. The desirable arm length should extend at least 3’ beyond the center of the leftmost turn lane.

All new traffic signal-light poles shall include a luminaire extension arm for roadway lighting per City Specifications.

4.7.3.3 Signal Pole and Controller Cabinet Placement

All traffic signal poles, pedestal poles, and controller cabinets shall be placed as follows:

- A minimum of 3' from the face of curb (if present) to the face of the pole or controller, with a minimum desirable separation of 5'.
- For roads with shoulders and no curbing, poles and cabinets shall be offset with the same minimum separations as curbing but measured from the outside edge of shoulder.
- For roads where only pavement exists without shoulder or curbing, poles and cabinets shall be offset a minimum of 5' from the edge of pavement, with a desirable minimum separation of 7'.

Cabinets shall be placed in a location that avoids any potential line-of-sight conflicts with turning traffic or pedestrians.

Traffic signal poles and cabinets shall not impede pedestrian movements at curb ramps or sidewalk areas.

4.7.3.4 Signal Heads

Vehicular signal heads shall be provided as follows:

- One signal head shall be centered over each exclusive through lane.
- Signal heads for left-turn lanes (with arrow indications) shall be provided as follows:
    - Single Turn Lane – One head shall be centered over the turn lane with a supplemental signal head mounted on the side of the far-left signal pole.
    - Dual Turn Lanes – At a minimum, one signal head shall be centered between the two turn lanes, but the desirable minimum is to center one head over each turn lane. A supplemental signal head shall also be mounted on the side of the far-left signal pole.
- Supplemental signal heads shall be mounted on the side of the pole for each approach, on both the far-left and far-right signal poles.
- The City will determine the need for signal heads for an exclusive right turn lane on a site-specific basis.

In all cases, vehicular signal heads shall have 12-inch diameter indications with tunnel type visors. All overhead signal heads shall have back plates per City Specifications.

All signal heads shall be mounted vertically.

Signal heads shall be provided for all pedestrian crossings at signalized intersections unless specified otherwise by the City. All pedestrian signal heads shall be located within the line-of-sight for crossing pedestrians. Push button detectors, with *MUTCD* standard instructional sign panels, shall also be provided for all protected crossings. Push buttons shall be located per *MUTCD* requirements and shall meet ADA

standards for height and horizontal reach. Exclusive pedestrian push button poles shall be provided as necessary.

All new pedestrian signal indications shall have symbols with countdown type displays.

4.7.3.5 Vehicle Detection and Signal Preemption

Vehicle stop line detection shall be provided, per City Specifications, for all approaches to the intersection.

Signal preemption detectors shall be provided for emergency vehicle detection for all approaches to the intersection when specified by the City Traffic Engineer, in conjunction with the appropriate fire district.

4.7.3.6 Requirements for Future Traffic Signals

Any intersection that the City identifies as requiring traffic signalization in the future and that will be modified or constructed as part of a private development or roadway construction project shall include traffic signal conduit with pull boxes and locate wires in conformance with City Specifications. The City shall approve the design for the placement of signal conduit and pull boxes, and this design shall consider future locations of signal poles and associated foundations to avoid conflicts.

4.8 LIGHTING AND UTILITIES

4.8.1 GENERAL

The provisions of this section apply to City streets.

4.8.1.1 Installation of Street Lighting

ARTERIALS:

Lighting units (27,500 lumen-250w) along arterials must be spaced at a minimum of 150’ on alternate sides of the street. All intersections must be provided with at least two street lights on opposite corners, as conditions allow. Signalized intersections shall include lights on each traffic signal-light pole.

COLLECTORS:

Collector lighting units (27,500 lumen-250w) must be spaced 200’ to 250’ on alternate sides of the roadway. All intersections must be provided with at least one street light.

LOCALS:

The Developer for new developments zoned Residential or like zoned Planned Developments may install curb or driveway lighting on a photocell for each property instead of streetlights.

Street lighting units along existing local streets will be installed only upon petition of a majority of the adjacent property owners and when the City determines that there is a traffic hazard. The City will not install private property lighting.

4.8.1.2 Installation Procedures

Proposed street lighting along all public ROW must be coordinated with the City and electric provider. The Developer must pay for all costs for new street lighting on public streets when installed for a new development.

4.8.1.3 Breakaway Structures and Lateral Clearances

It is the intent of the City to encourage all fixed utility objects installed in the ROW, such as street light poles, fire hydrants, or telephone junction boxes, to be of the breakaway type meeting the latest AASHTO construction specifications. Where breakaway type construction cannot be provided, a desirable minimum horizontal clearance of 10' should be provided between the flowline of the street (or the edge of the paved traveled way) and any new or relocated non-breakaway structure in excess of 4" in height. If sufficient ROW is not available for the 10' clear zone, all installations are encouraged to be placed "as far as practical" from the edge of the traveled way. This policy applies to all arterial and major collector roadways whose posted speed limit is in excess of 30 MPH. The policy is also intended to provide minimum suggested guidelines for the purpose of protecting the public health, safety, and welfare. It is recommended that satisfactory dynamic performance for breakaway objects be evaluated in accordance with AASHTO specifications. For local City streets, the provision of a 5' lateral clearance is the recommended minimum.

4.8.1.4 Utility Easements

When available ROW is limited, utility providers may require additional easements for installation. This shall be coordinated with the City, Developer, and applicable utility provider(s). Easement requirements vary by provider, utility type and size, and available ROW and will be discussed on a case-by-case basis. When possible, shared easements should be considered.

4.8.1.5 Undergrounding of New and Existing Materials

It is the policy of the City to require the use and to facilitate the installation of underground utilities for initial installation of new utilities and for the replacement and relocation of existing utilities. This policy is contained in Sections 12-11-302 of the LDC ?????? and may be revised from time to time. It is the policy of the City to promote a reduction in the number of utility poles during the replacement, relocation, upgrade, or maintenance of existing overhead utilities.

4.8.1.6 Depth of Utilities

Generally, the minimum allowable depth of utilities shall be as follows:

a. Street lights – 30"
b. Gas – 30"
c. Telephone – 30" to 36"
d. Electric power – 42"
e. Storm sewer – 40"
f. Sanitary sewer – 60"
g. Cable TV – 24"
h. Water – 54"

i. Fiberoptic – 36”

Depths may vary based on site restrictions and utility provider requirements.

4.8.1.7 Utility Providers and Districts

SANITARY AND WATER PROVIDERS
Arapahoe County Water & Wastewater Authority
Arapahoe Estates Water District
Castlewood Water District
Castlewood Water & Sanitation District A
Castlewood Water & Sanitation District E
City of Littleton Water District
East Cherry Creek Valley Water District
East Cherry Creek Valley Water & Sanitation District
East Valley Water & Sanitation District
Havana Water & Sanitation District
Inverness Sanitation District
Inverness Water & Sanitation District
South Arapahoe Sanitation District
South Englewood Sanitation District No. 1A
Southeast Englewood Water District
Southgate Water & Sanitation District
Willows Water District (Master Meter)
Willows Water District (Read & Bill)

FIRE RESCUE DISTRICTS
Littleton Fire Rescue
South Metro Fire Rescue Authority (formerly South Metro Fire and Parker Fire)
Cunningham Fire Protection District

STORMWATER AUTHORITIES
Southeast Metro Stormwater Authority (SEMSWA)
Cherry Creek Basin Water Quality Authority
Urban Drainage and Flood Control District

DRY UTILITY PROVIDERS
Qwest Communications
Intermountain Rural Electric Association
Xcel Energy
Comcast
Utility Notification Center of Colorado

SECTION 5.0 PAVEMENT DESIGN

5.1 GENERAL

This section provides the basic criteria and design procedures for roadway pavements. Recommended design methodologies for asphalt and Portland Cement Concrete are addressed and essentially follow the Metropolitan Governments Pavement Engineers Council (MGPEC) "Pavement Design Standards and Construction Specifications" (most recent revision), hereafter called MGPEC Standards.

The MGPEC Standards shall pertain to all roadway-related public improvements, including, but not limited to. new roadways, auxiliary lanes, curb and gutter, sidewalks, and medians. Any roadway construction related improvements shall require a Pavement Design Report as detailed in the following section and comply with City ROW Regulations. In an effort to ensure the integrity of all pavement sections, auxiliary lanes shall be designed using the same parameters as the through lanes. Regardless of the results of the *Pavement Design Report*, a minimum depth of 6" for Hot Mix Asphalt and 8" for Portland Concrete Cement shall be used on all public roadways.

5.2 PAVEMENT DESIGN REPORT SUBMITTAL OPTIONS

Reports for pavement design (includes Preliminary Design, Design Confirmation, and Final Design) shall be prepared per the requirements detailed in the MGPEC Standards and should be submitted along with the ROW Permit.

1. The *Final Pavement Design Report* may be completed after City approval of the associated Construction Plans but prior to or concurrent with issuance of ROW permits.

5.3 FIELD INVESTIGATION

5.3.1 PRELIMINARY DESIGN AND FINAL DESIGN REPORTS

Field investigation for the Preliminary and Final Design Reports shall conform to MGPEC Standards.

5.3.2 DESIGN CONFIRMATION REPORT

To confirm the assumptions made in the Preliminary Design Report, the Design Confirmation Report shall conform to the field investigation requirements set forth in the MGPEC Standards.

5.4 LABORATORY TESTING

5.4.1 PRELIMINARY DESIGN REPORT AND FINAL DESIGN REPORT

5.4.1.1 Soil Classification, Swell Tests, and Strength Tests

Soil classification, swell tests, and strength tests shall be prepared per MGPEC Standards.

5.4.1.2 Life Cycle Cost Analysis

Life Cycle Cost Analysis shall be completed per MGPEC Standards for all Private Roadways that will be owned and maintained in common ownership.

5.4.2 Design Confirmation Report

Laboratory testing requirements are detailed in the MGPEC Standards for a Design Confirmation Report.

5.5 DESIGN REQUIREMENTS

The design, costs, and maintenance recommendations shall conform to requirements of MGPEC Standards.

5.6 REPORT REQUIREMENTS

5.6.1 Preliminary Design Report, Design Confirmation Report, and Final Design Report

The reports shall be inclusive of all requirements set forth in the MGPEC Standards.

PART III
CONSTRUCTION AND INSPECTION

TABLE OF CONTENTS

Page

SECTION 6.0 CONSTRUCTION PROCEDURES AND PRACTICES 1

6.1 GENERAL 1

6.2 DEMOLITION 1

6.2.1 Demolition General 1

6.2.2 Local Laws, Ordinances and Code 1

6.2.3 Protection of Public, Onsite and Project Adjacent Improvements 1

6.2.4 Disconnection of Existing Utilities 2

6.2.5 Equipment Operated On Streets 2

6.2.6 Protection of Survey Monuments 2

6.2.7 Fences 2

6.2.8 Trees and Shrubs 2

6.2.9 Cesspools, Privies, Buried Fuel, and Septic Tanks 3

6.2.10 Wells 3

6.2.11 Buildings 3

6.2.12 Slabs On Grade 3

6.2.13 Walls 3

6.2.14 Salvage 3

6.2.15 Filling and Grading 3

6.2.16 Topsoil 3

6.3 HOUSEKEEPING, RESTORATION, AND CLEANUP 4

6.3.1 Surplus Excavation 4

6.3.2 Concrete Curb, Gutter, Valley Gutter, and Sidewalk 4

6.3.3 Surface Restoration 4

6.4 SOILS AND EARTHWORK 5

6.4.1 Excavation, Embankment, and Compaction 5

6.4.2 Utility Trenching, Backfill, and Bedding 5

6.5 PAVEMENT 6

6.5.1 General 6

6.5.2 Procedure for Material Source Approval 6

6.5.3 Violations of Approval Conditions 7
6.5.4 Use of Materials not Listed in Section 6.5.5 7
6.5.5 Material Specifications 7
6.6 TRAFFIC CONTROL 9
6.6.1 Traffic Control Devices 9
6.6.2 After-Hours Traffic Controls 9
6.6.3 Damage to Permanent Traffic Control 9
6.6.4 Specific Requirements 9
6.6.5 Flagpersons 10
6.6.6 Traffic Signal Construction Standards 10
6.7 TRAFFIC SIGNAGE AND PAVEMENT MARKINGS 39
6.7.1 General 39
6.7.2 Traffic Control Devices on Public Property 39
6.7.3 Traffic Control Devices on Private Property 39
6.7.4 Pavement Markings 39
6.8 TRAFFIC SIGNAL POLES, PEDESTALS, AND MAST ARMS 40
6.8.1 Controller Cabinet General 40
6.8.2 Cabinet Design and Construction 41
6.8.3 Terminals and Facilities/Main Panel Design and Construction 43
6.8.4 Power Panel Design and Construction 45
6.8.5 Auxiliary Cabinet Equipment 45
6.8.6 Vehicle Detection 46
6.8.7 Cabinet Test Switches and Police Panel 47
6.8.8 Controller Telemetry Interface Panel 48
6.8.9 Auxiliary Devices 48
6.8.10 Testing and Warranty 50
6.8.11 UPS Specifications 50
6.8.12 Power Input/Output 50
6.8.13 Run Time 51
6.8.14 Indications, Alarms, Faults 51
6.8.15 Switches, Ports, Receptacles, Controls 51
6.8.16 Hardware, Software, Cabling 52

6.8.17 Warranty 52
6.8.18 Miscellaneous Hardware 52
6.8.19 Paint – Signal Poles 53
6.8.20 Instructions and Wiring Diagrams 54
6.8.21 Radio Interconnect Communications 54
SECTION 7.0 INSPECTION AND TESTING 55
7.1 QUALITY CONTROL/QUALITY ASSURANCE 55
7.2 CONSTRUCTION INSPECTION 55
7.3 CONSTRUCTION TESTING 55
SECTION 8.0 ACCEPTANCE PROCEDURES AND REQUIREMENTS 56
8.1 ACCEPTANCE AND WARRANTIES 56
8.2 RECORD DRAWINGS 56
8.2.1 Requirements for Construction As-Built Plans 56

SECTION 6.0 CONSTRUCTION PROCEDURES AND PRACTICES

6.1 GENERAL

The information contained within this part of the Manual is intended to supplement the construction requirements found within the City's ROW Regulations. Refer to the ROW Regulations for permitting procedures.

6.2 DEMOLITION

6.2.1 DEMOLITION GENERAL

This section contains standards for site (horizontal) demolition. Building and structure demolition requirements are addressed in the City Municipal Code or by the City Building Division and will require a separate permit.

Work will often include demolition and removal from the site of all designated slabs on grade, retaining walls, steps, asphalt, rubbish, stumps, trees, shrubs, fencing, buried tanks, pipe, etc. Any depressed areas resulting from removals are to be filled and graded to drain. All items produced by demolition, unless otherwise specified by the City, shall become the property of the Contractor and will be the Contractor's responsibility to remove and dispose of in a responsible and safe manner. These Specifications shall apply to all new construction within the City.

6.2.2 LOCAL LAWS, ORDINANCES AND CODE

Any contractor or subcontractor shall be licensed with and bonded with the City before beginning any work within the City and shall comply with all current federal, state, and local laws, codes, and ordinances pertaining to demolition, wrecking, clearing, and grubbing operations.

6.2.3 PROTECTION OF PUBLIC, ONSITE AND PROJECT ADJACENT IMPROVEMENTS

The Contractor will be held responsible to ensure the protection of all existing public improvements such as fire hydrants, street lights, traffic lights, traffic signs, catch basins, manholes, valves, survey monuments, overhead utility lines and poles, and any existing underground irrigation or utility lines that may be damaged during the execution of the project. It will be the Contractor's responsibility to replace all damaged public improvements at his own expense. Existing manhole rings and covers, valve boxes, and sprinkler heads found defective shall be replaced, as directed by the City Inspector and/or utility owner inspector, when applicable.

The Contractor shall take proper precautions for the protection of and replacement or restoration of driveway culverts, street intersection culverts or aprons, storm drains or inlets, fences, irrigation ditch crossings and diversion boxes, mail boxes, shrubbery, flowers, trees, driveway approaches, and all other public or private installations that may be encountered during the performance of work. The Contractor shall provide each property with access at all times during construction, whenever reasonable. Existing driveways shall be cut, filled, and graded as required or as directed by the City Inspector to provide permanent access. Existing driveways shall be resurfaced with the then existing type of surfacing, whenever surfaces are destroyed.

6.2.4 Disconnection of Existing Utilities

Before starting demolition of any structure, the Contractor shall arrange for the disconnection of all utility service connections, such as water, sewer, cable TV, telephone, gas, and electrical power connected thereto. Disconnects shall be made in accordance with the regulations of the utility that controls the supply of service involved.

Underground services are to be cut, capped, and marked (per the provider's specifications) at the point of disconnect to facilitate future location of the line. Markings of the end of the line shall consist of a 4x4 wooden stake or metal fence post driven into the ground and then tagged to note the type of facility.

It shall be the responsibility of the Contractor to backfill all holes to finish grade and install concrete or asphalt surfacing when the holes excavated are in streets or paved areas. The Contractor shall correct any unsatisfactory disconnects at the discretion of City and/or utility owner inspectors.

6.2.5 Equipment Operated On Streets

The Contractor shall be permitted to operate only pneumatic-tired equipment over any paved surface and shall be responsible for any damage to street surface resulting from his operations. Generally, contact of heavy equipment with paved surfaces to remain should be avoided whenever feasible. When unavoidable, the Contractor shall contact the City to investigate the existing condition of public improvements and avoid excessive repairs when the project is complete.

6.2.6 Protection of Survey Monuments

Before starting demolition or construction, any public survey monument or range box that may be disturbed during construction shall be referenced to a minimum of two points outside the limits of construction by a Colorado Professional Land Surveyor. Any public survey monument or range box disturbed as a result of construction shall be replaced by a Colorado Professional Land Surveyor as required by law.

6.2.7 Fences

Where existing fences are to be removed, they shall be replaced with the same or higher quality fencing in locations agreed upon by the City and/or property owner.

6.2.8 Trees and Shrubs

Trees not impeding demolition of structures or performance of the work will not be removed except as designated. Trees and shrubbery designated for removal will include stumps and roots to a minimum depth of 3' below existing or finished grade, whichever is lower. Downed trees, brush, and rubble shall be removed from the site.

Trees scheduled to remain shall be carefully protected from damage during performance of the work. Protection measures should be in place before any demolition or site work begins. Any damage due to the Contractor's operations shall be repaired by suitable tree surgery methods or replaced to City and/or property owner satisfaction. Damaged trees shall be repaired or replaced, as approved by the City at the Contractor's expense.

6.2.9 Cesspools, Privies, Buried Fuel, and Septic Tanks

Tanks that may exist on project sites shall be completely removed and contaminated soils remediated to the standards and by the methods approved by the State. The Contractor shall fill the void created to finished grade.

6.2.10 Wells

On-site wells and well casings shall be sealed to prevent contamination of groundwater aquifers in accordance with State regulations. The utility that services the location and the State Engineer shall approve all abandonment activities.

6.2.11 Buildings

Building demolition will require separate permitting from the City Building Division.

6.2.12 Slabs On Grade

All concrete and asphalt slabs on grade shall be removed from the site. This shall include, but is not limited to, driveways, sidewalks, curbs, cross pans, gutters, etc. Foundations and floor slabs will require demolition permits from the City Building Division.

6.2.13 Walls

Retaining walls and their footings shall be removed in their entirety from the site.

6.2.14 Salvage

Unless otherwise specified in the Special Conditions on City projects, all materials, salvageable or otherwise, to be removed from the site are considered as being the property of the Contractor performing the work. Disposal of materials shall be completed in a safe and responsible manner in accordance with State and local laws.

6.2.15 Filling and Grading

Depressions resulting from the removal of structures, basement walls, footings, buried tanks etc., shall be filled and compacted with clean fill materials to eliminate hazards of cave-in, accumulation, and ponding of water. Under no circumstances shall organic building material, broken concrete over 6” in diameter, or asphalt be considered as approved fill material.

Immediately following demolition and removal of rubbish from the site, the Contractor shall grade the entire affected area by filling, compacting, and leveling the site to existing adjacent grades.

6.2.16 Topsoil

The Contractor shall salvage within the project limits, or acquire when needed, loose friable loam reasonably free of admixtures of subsoil, refuse, stumps, rocks, roots, brush, weeds, or other material that would be detrimental to the proper development of vegetative growth for use as topsoil.

Topsoil shall be placed and spread at locations and to the thickness shown on the plans, after the areas to be covered have been properly prepared and grading operations in the area have been completed and accepted. Soil so placed shall be keyed to the underlying subgrade by the use of harrows, rollers, or other

equipment suitable for the purpose, followed by applying water in a fine spray by nozzles or spray bars in such a manner and extent that eroding will not occur.

6.3 HOUSEKEEPING, RESTORATION, AND CLEANUP

6.3.1 SURPLUS EXCAVATION

All surplus excavated material shall be removed from the job site by and to locations provided by the Contractor. The Contractor shall obtain written permission before disposing of excess material on private property. The City relinquishes all right and title to the surplus material unless otherwise specified in the Special Conditions on City projects or coordinated with City staff.

Excess material shall not be wasted on any public ROW without written permission from the City.

6.3.2 CONCRETE CURB, GUTTER, VALLEY GUTTER, AND SIDEWALK

The Contractor shall replace, in like kind, all curb and gutter, valley gutter, or sidewalks that are damaged during construction. The replacement shall be of equal or better quality than found at a minimum concrete thickness of 6”. Minimum removal length shall be the entire damaged panel, from existing control joint to existing control joint, or as specified by a City Inspector.

6.3.3 SURFACE RESTORATION

The Contractor must secure and pay for all ROW permits required from the City for the execution of work. The Contractor shall assume full responsibility for the consequences of such cutting or damaging and shall comply with all requirements contained therein by the City ROW regulations.

The replacement of excavated base course, permanent paving, and damaged curb and gutter shall be done in accordance with the City ROW regulations and requirements contained in the permits.

The Contractor shall replace damaged driveways in like kind to an equal or better condition than existed prior to construction. All cuts necessary for the replacement of damaged concrete shall be made using a concrete saw.

Drainage and ditch facilities shall be maintained per the standards of SEMSWA and necessary permits shall be obtained from the same.

Unsurfaced Areas: The general grade and condition of all unsurfaced areas shall be restored to nearly as practicable to the grade and condition immediately prior to construction. Topsoil shall be removed, saved, and replaced in cultivated and agricultural areas; and any excess earth shall be removed from the ROW. If topsoil is not saved, the Contractor must import additional topsoil to match existing prior to resurfacing. All previously grassed areas shall be seeded or sodded per the specifications of SEMSWA, and the Contractor shall be responsible for caring for the grass until its growth is established.

Surfaced Areas: See the City ROW regulations.

Cleanup: Upon completion of the work, the Contractor shall remove from the job site all rubbish, unused materials, concrete forms, and other like material. At all times during construction, the Contractor shall

maintain the site, partially finished structures, material stockpiles, and other like areas in a reasonable state of order and cleanliness and in compliance with City and SEMSWA requirements.

If the Contractor fails to perform the above work in a timely manner, the City may perform the work at the expense of the Contractor.

6.4 SOILS AND EARTHWORK

6.4.1 EXCAVATION, EMBANKMENT, AND COMPACTION

Areas to receive embankment and/or structural backfill material and the top of cut areas shall first be stripped of all vegetation, organic material, asphalt, concrete, and materials unsuitable for use in embankments. Topsoil shall be stockpiled for reuse whenever practical and unsuitable material disposed of. Under no circumstances shall organic building material, broken concrete (greater than 6" diameter) or asphalt be considered as approved embankment material.

Embankment and fill material should conform to the material, moisture, compaction, etc., specifications defined in the *Geotechnical/Pavement Design Report,* as well as the City ROW regulations. In connection with normal grading operations, the Contractor shall use trucks, tractors, bulldozers, and other pieces of equipment in the most effective manner by routing the equipment over the entire embankment or roadway width. Compaction testing shall be performed as per the City ROW regulations.

6.4.2 UTILITY TRENCHING, BACKFILL, AND BEDDING

6.4.2.1 General

Standards and specifications for utility trenching, backfill, and bedding can be found within the City ROW regulations with further information available from the utility owner. Trench backfill should be completed as shown in the City Standard Details.

Access to private driveways shall be provided to property owners at all times except during working hours when construction operations prohibit provision of such access. Unobstructed access to fire hydrants must be provided at all times. The Contractor shall notify the property owners at least 48 hours in advance of beginning work or in accordance with ROW easements that set forth ingress/egress requirements, prior to any excavation to be made in City easements through private property.

The Contractor shall take precautions to limit the removal of or damage to existing pavements, sidewalks, curbs, lawns, shrubbery, trees, hedges, walls, fences, buildings, or other existing improvements and shall replace or restore such improvements to their original location and condition after the excavation has been backfilled and compacted.

The Contractor shall be familiar with all specific conditions contained in private easements. The Contractor shall perform all of his work in accordance with the stipulations contained therein.

6.4.2.2 Backfilling

The permittee shall advise the City of the proposed trench backfill date and obtain necessary ROW permits before commencing work. Typically, backfill will take place on the same day as trenching; if this is not the

case, the City must be given prior notice as required in the City ROW regulations. The bottom of the trench shall be prepared to provide a firm foundation for the pipe or facility in accordance with the bedding conditions specified by the geotechnical engineer or utility owner for the type of pipe or facility to be installed. The subgrade of the trench shall be kept free of standing water. Where the trench subgrade material is found to be unsuitable and does not afford a solid foundation, the Contractor shall excavate to such depth as necessary to construct a stable foundation. A stable foundation shall be constructed by placing crushed rock or other CDOT, utility owner, or City approved granular material under the pipe.

Backfill shall be placed so that the pipe will not be displaced or damaged. Bedding requirements for utilities shall meet the minimum requirements of the utility provider and those included in the City ROW regulations. For trenching within the limits of the roadway, including areas of pavement, curb, gutter, and sidewalks, trenches shall be backfilled with approved materials immediately after the utility authorized by the permit has been placed in the trench.

For trenching outside the roadway, the subgrade shall conform to the lines, grades, and cross sections as shown on the approved plans. The subgrade shall be compacted in successive layers not to exceed 8" thick and shall be finished and maintained in a smooth compacted condition. The compacted surface shall be free from rutting or other objectionable irregularities.

6.4.2.3 Base Course

Base material shall conform to the lines, grades, cross sections, and thickness shown on the approved plans or geotechnical report and shall be finished and maintained in an acceptable condition at least one day in advance of placing prime coat. For more information on base course requirements, refer to the City ROW regulations.

6.5 PAVEMENT

6.5.1 GENERAL

The Specifications presented in this section are performance oriented. The City's objective in setting forth these Specifications is to achieve an acceptable quality of roadway structures. All sources for the mined or manufactured materials listed in Section 6.5.5 must be annually approved by the City as having met the appropriate materials performance specifications. This approval is a condition of using those material sources for public improvement construction. For the purpose of these standards, public improvements are all roadway improvements, sidewalks, curbs and gutters, and other public works within City ROW.

6.5.2 PROCEDURE FOR MATERIAL SOURCE APPROVAL

A material supplier for any City public improvement must supply written documentation and material test results from a competent material-testing laboratory that describes:

a. Material(s) being tested to meet City Specifications
b. The test procedures employed
c. The supplier's manufacturing, mining, or treating process by which the tested materials were created
d. The material test results

e. A signed statement by the material supplier that the materials produced and tested for this certification are truly representative of the materials to be provided for public improvements in Centennial during the coming 365-day period

6.5.3 Violations of Approval Conditions

6.5.3.1 Random Testing

The City may order random tests of materials used in City ROW to verify compliance with material specifications.

Any and all material used to construct City public improvements that is not from a certified source or that is from a certified source and fails one or more random material tests will be subject to complete removal as a condition of City acceptance of that public improvement. The extent of the material to be removed will be at the discretion of the City.

6.5.4 Use of Materials not Listed in Section 6.5.5

Materials listed in this section and provided with a set of specifications are those deemed by the City to be the primary structural materials commonly or typically used in public improvements. Ancillary public improvement materials such as manufactured paints and coatings, bonding agents, sealers, gaskets, insulating materials, etc., should be in compliance with CDOT material specifications for the appropriate material employed. Alternate materials for construction may be proposed for use, and the City will make decisions on acceptability of alternate materials.

6.5.5 Material Specifications

6.5.5.1 Hot Mix Asphalt Pavement

The material shall consist of a mixture of aggregate, filler (if required), and asphalt cement. The aggregate mixture shall meet the grading requirements of the job mix formula, submitted to and approved by the City. Tests on the aggregate for cleanliness, abrasion loss, and fractured faces shall meet the Aggregate Properties and Gradation ranges allowed by the MGPEC Standards.

a. Aggregates shall not contain clay balls, organic matter, or other deleterious substances.
b. After the job mix formula is established and approved, all mix furnished for the project shall conform to it within the tolerances allowed per the MGPEC Standards.
c. Hydrated lime shall be added to aggregate per the requirements of the MGPEC Standards.
d. A mix design, including the job mix formula, shall be submitted for review and approval a minimum of 14 days prior to placing mix on the project. The mix design shall be performed using the standards and procedures detailed in MGPEC Standards.

6.5.5.2 Portland Cement Concrete Pavement

This material shall consist of a mixture of coarse and fine aggregates, Portland cement, water and other materials, or admixtures as required per MGPEC Standards, Appendix Item 11 except as described below.

Concrete shall conform to the following requirements:

Min. 28 day Field Compressive Strength	4200 psi
Min. Cementitious Materials	660 lbs./cu. yd.
Max. Water/Cementitious Ratio	0.44 lbs H_2O/lbs cement
Air Content % Range	4–8
Maximum Slump	4"
Min. Fine Aggregate % of total Aggregate	55% AASHTO M 43 size No 357 or No. 467 coarse aggregate by weight

a. Fine aggregates shall meet MGPEC Standards aggregate properties and gradation requirements.
b. Coarse aggregates shall meet MGPEC Standards aggregate properties and gradation requirements.
c. Fly ash properties shall comply with MGPEC Standards.
d. Water shall comply with MGPEC Standards.
e. Admixtures shall comply with MGPEC Standards.
f. Curing materials and method of application shall comply with MGPEC Standards.
g. Reinforcement materials and method of placement shall comply with MGPEC Standards.
h. Minimum laboratory trial mix strength shall comply with the MGPEC Standards. Per section, the lab trial mix design strength still needs to meet 5,000 psi, but the minimum 1,000 psi over-design requirement can be decreased to 800 psi to still meet 5,000 psi due to the City required strength of 4,200 (i.e., City strength of 4,200 + 800 =5,000 and still meets that requirement in MGPEC Standards).

6.5.5.3 Aggregate Base Coarse

This material shall consist of hard, durable particles or fragments of stone or gravel, crushed to required sizes, containing an appropriate quantity of sand or other finely divided mineral matter, which conform to the requirements or MGPEC Standards.

Only aggregate from City approved sources shall be used. unless otherwise approved in writing by the City. Approval of sources will be at the discretion of the City, and submissions will, at a minimum, consist of supplying documented gradation, Atterburg Limits, and CBR/R-Value testing annually. See **Section 6.5.2**.

The City requires all aggregate base coarse material used for public improvements to meet the design properties and gradation requirements detailed in MGPEC Standards.

6.5.5.4 Moisture Treatment

Equipment and moisture treatment methods shall comply with MGPEC Standards.

6.5.5.5 Stabilized Subgrade

The materials, mix designs, and methods of placement for stabilizing the subgrade soils before paving shall comply with City ROW regulations and MGPEC Standards. For detached sidewalks and landscaped medians, the subgrade stabilization shall end at the back of curb. For attached sidewalks and hardscape

medians, the subgrade stabilization shall extend to back of walk and under the full width of the median, respectively.

6.5.5.6 Concrete Curbs, Gutters and Sidewalks

Materials, equipment, and methods for placement shall comply with MGPEC Standards.

6.6 TRAFFIC CONTROL

6.6.1 TRAFFIC CONTROL DEVICES

Construction activities or maintenance activities that involve vehicles, materials, or equipment that interfere with the movement of vehicular or pedestrian traffic on any public street must have appropriate traffic control during the activity. Traffic control devices and standards shall be in accordance with the *MUTCD*. The Contractor shall provide traffic control plans when applying for a ROW permit for construction activities. Additional information on traffic control requirements can be found in the City ROW regulations.

6.6.2 AFTER-HOURS TRAFFIC CONTROLS

Barricades, cones, signs, or other vehicular or pedestrian traffic controls shall be taken out of service after designated working hours unless their use and application are required to ensure the safety of the traveling public. In that case, those controls shall be noted on the City approved traffic control plan (TCP). For more information, refer to the City ROW regulations.

6.6.3 DAMAGE TO PERMANENT TRAFFIC CONTROL

Any damage to traffic signal poles, lines, and loop detectors shall be immediately reported to the City's 24-hour Call Center at 303-325-8000.

6.6.4 SPECIFIC REQUIREMENTS

1. Barricades shall be painted, kept clean, weighted, and the face material shall be retro-reflective.
2. All signs (warning, regulatory, etc.) shall be kept clean and free of graffiti and shall be replaced when the face is damaged. These sign faces shall be retro-reflective. All signs shall be removed or turned away from the roadway immediately after they are no longer applicable, especially when left at the job site overnight.
3. Traffic cones are for daytime use only. Barricading devices with lights shall be used for all work that occurs overnight.
4. When lights are used on barricading devices, steady burn lights shall be used for delineation and channelization. Flashing lights shall be used to denote a specific hazard.
5. Under certain conditions, the use of pavement markings shall be required in addition to the devices used for delineation. Temporary striping shall be shown on the TCP with location and extent verified by the City Traffic Division. When temporary markings are used, the existing markings shall be removed (not painted black). The Contractor shall install temporary markings and remove them when the construction is completed. The City shall approve the permanent markings, which shall be reinstalled by the Contractor.

6. Pedestrians shall not be diverted onto the roadway. When pedestrian routes are affected by construction, a pedestrian detour shall be provided unless waived by the City.
7. Open trenches shall not be allowed after work hours without prior approval of the City.
8. Work hours vary by roadway designation and can be found in the City ROW regulations. The Contractor must submit a written request for approval of work hours beyond the typical limits. The Contractor shall also be responsible for all overtime inspection fees for work completed outside the work hours or as stated in the Special Conditions of City Projects.
9. Measures to prevent spillage and tracking from trucks and equipment onto paved surfaces should be used at all times. If any spillage or tracking occurs, it shall be cleaned up immediately by approved methods.
10. When the normal operation of a traffic signal must be interrupted, uniformed officers shall be used to direct traffic. This shall be coordinated with the City and Arapahoe County Sheriff's Office prior to the work. The Contractor shall bear any expense incurred during this operation.
11. Construction within the ROW will not begin until all traffic control devices are in place, per the approved TCP.
12. The Contractor will notify the Police Department, Fire Department, and Public Works Department before beginning construction.
13. The Contractor will notify all utility companies, including, but not limited to, the Utility Notification Center of Colorado, a minimum of 48 hours before beginning construction. The Contractor shall be responsible for coordinating with utility companies.
14. The Contractor will keep a signed copy of the TCP at the work area during work hours. This will be available for inspection by City (or State) personnel.
15. In some cases, the City Traffic Engineer may require special, advance notice signs. This will be determined upon review of ROW permits.

6.6.5 FLAGPERSONS

Anytime a flagger is required to direct the flow of traffic, that flagger must be visible to traffic. The flagger must wear safety orange or yellow clothing (vest, shirt, or jacket). For nighttime operations, this clothing must be reflective. The flagger must follow the flagging procedures stated in the *MUTCD*.

6.6.6 TRAFFIC SIGNAL CONSTRUCTION STANDARDS

The work specified in this section describes the installation of necessary material and equipment to complete traffic signals and/or other electrical systems.

1. General Requirements

A. Regulations and Code

1. All electrical equipment and material shall conform to the standards of the National Electrical Manufacturers Association (NEMA), National Electrical Safety Code (NESC), or CDOT, whichever is applicable.

2. All material and work shall conform to the requirements of the National Electrical Code (hereinafter referred to as the "Code"), the Rules for Overhead Electrical Line Construction of the Public Utilities Commission, the Standards of the American Society of Testing Materials (ASTM), and the American Standards Association (ASA), and any local ordinance which may apply.

B. Signal Activation

1. The Contractor shall coordinate with the City Project Manager as soon as a schedule is created so that orders may be issued for power connection to the intersection on the specified "turn-on" date.

C. Existing Traffic Signals

1. When existing traffic signal installations are modified or completely rebuilt, the Contractor shall avoid disturbing existing traffic signal equipment until the new or modified traffic signal system has been installed and put into operation.
2. If the existing traffic signal equipment must be removed to accommodate the new construction, the Contractor shall, with the Engineer's approval and at the Contractor's sole expense, install temporary overhead traffic signal equipment.
3. The Contractor shall at all times maintain a minimum of 2 signal heads with red, yellow, and green indications for each signal phase, as specified in the *MUTCD*.
4. Equipment Salvage. All traffic signal equipment that is removed shall remain the property of the City unless otherwise agreed upon, in writing, by the City. The Contractor is to remover such property from the work site and return it to the City of Centennial Public Works Facility. Delivery shall be coordinated with the City Project Manager in advance.

D. Signal Heads Not in Use

1. Signal heads installed on signal poles and mast arms shall be bagged at new signal locations if they are not ready for actual electrical operation. Bags shall remain on signal heads for the shortest reasonable time period but for no more than 90 days.

E. Field Location of Signal Equipment

1. All signal poles, pole foundations, control cabinets, pull boxes, and loops shall be field located by the Contractor and approved by the City Traffic Engineer or Project Manager.
2. Traffic signal poles and mast arms shall not be ordered until field verification of pole foundations is complete.

F. Signal Equipment List and Drawings

1. The Contractor shall submit a list of equipment and material that they propose to furnish within 10 days of the execution of the owner-contractor agreement.

a. The submittal shall include all equipment and material as identified on the plans or in the specifications by the manufacturer's name, which is necessary or customary in the trade to identify such equipment and material.
b. The list shall be complete as to name of manufacturer, unit size, and material composition and shall be supplemented by such other data as may be required by the City Traffic Engineer.

2. The Engineer or their designee must inspect or sample any materials other than those already approved according to the material specifications prior to installation.
3. If the Contractor proposes a substitution of equipment called for in the plans or specifications, the Contractor shall provide additional information to prove the substitution item is of equal or superior quality.
4. Any material and/or equipment installed by the Contractor that is not in conformance with the City specifications will be removed or changed at the Contractor's expense.
5. Upon completion of the work, the Contractor shall submit 2 copies of "as-built" drawings or a corrected plan showing, in detail, all construction changes including, but not limited to, wiring, cable, and location and depth of conduit.

G. Instructions and Wiring Diagrams

1. All equipment shall be provided with 3 sets of complete installation instructions, including a complete chart of field connections and a manual for the controller, containing service instructions, wiring diagrams, trouble-shooting procedures, etc.
2. The service manual shall clearly reference each and every component used and provides its value, ratings, and manufacturer part number.

H. Guarantee

1. The Contractor shall include in their proposal all warrants and/or guarantees with respect to materials, parts, workmanship, and performance of the product to be supplied. The minimum guarantee period for all work and products shall be 1 year from the date of final acceptance of the contract.
2. The Contractor shall either attach to the bid a statement that all material to be supplied is in exact accordance with the specifications or list in detail any and all deviations there from. The supplying of equipment that is not in accordance with the specification and on which the Contractor has indicated no exception shall be cause for rejection of the equipment and correction of the non-specification items entirely at the Contractor's expense.

2. Underground Facilities

A. Foundations

1. All foundations shall be Portland cement concrete conforming to the applicable requirements of construction specifications of the City, except as herein provided.

2. Controller cabinet foundations shall be mounted on a traffic signal pole or fiberglass base, as shown on the plans. Cabinet fiberglass base shall be set on 12” of crushed rock with 50 percent of the base extending below grade. The interior of the base shall be filled with crushed rock to a depth even with the grade on the exterior of the cabinet. Conduits within the cabinet base shall extend approximately 6” above the crushed rock.
3. Anchor bolts shall conform to the specifications, and each individual bolt shall have two flat washers, one lock washer, and two nuts. Shims or other similar devices for plumbing or raking will not be permitted.

B. Contractor Conduit

1. All cables and conductors shall be installed in conduit or within poles, pedestals, or mast arms, except in cases where the plans specify aerial cable installation. All PVC conduit will be of Schedule 40 or greater. No metal conduit shall be used.
2. The following conduit schedule shall apply unless otherwise specified in the plans:

Run Type	Quant.	Size	Use
Street Crossings	1	3”	120 voltage
Street Crossings	1	2”	Low voltage
Street Crossings	1	2”	Xcel use
Signal Pole	1	3”	Signal cables
Signal Pole	1	2”	Xcel use
Controller Cabinet	2	3”	120 voltage
Controller Cabinet	2	2”	Low voltage
Interconnect	1	2”	Interconnect
Service Point	1	2”	Xcel use

3. The Contractor, at their sole expense, may use larger conduit if desired. Where larger conduit is used, it shall be for the entire length of the run from outlet. No reducing couplings will be permitted underground.
4. Where a “stub-out” is called for on the plans, a conduit sweeping “ell” shall be installed in the direction indicated and properly capped. The locations of ends of all conduits in structures or terminating at curbs shall be marked by a “Y” at least 3’’ high cut into the face of the curb, gutter, or wall directly above the conduit.
5. Conduit bends, except factory bends, shall have a radius of not less than six times the inside diameter of the conduit. Where factory bends are not used, conduit shall be bent without crimping or flattening, using the longest radius practicable.
6. Conduit shall be laid at a depth of not less than 24” below the top of curb grade in sidewalk or grassy areas and to a depth of not less than 30” below the finished grade in all other areas. The appropriate railroad authority shall specify and approve conduit under railroad tracks.

7. Trench excavations for conduit shall be 2” wider than the outside diameter of the conduit. Backfilling of conduit trenches shall be accomplished by placing concrete or approved flow-fill up to the bottom surface of the existing or new roadway surface material. The remaining portion of the excavation shall be backfilled with the same type of material used to construct the existing roadway surface.
8. Conduit shall always enter a foundation, pull box, or any other type structure from the direction of the run only.
9. Conduits terminating in a pole shall extend approximately 3” vertically above the foundation.
10. All conduit runs that exceed 10) in length shall have a continuous nylon line pulled into the conduit, along with the specified electrical cables. The line shall be firmly secured at each end of the conduit run with a minimum slack of 3’. The purpose of this line is to be able to pull future electrical cable through the existing conduit runs.
11. Existing underground conduit to be incorporated into a new system shall be cleaned with a mandrel or blown out with compressed air.
12. New conduit runs shown on the plans are for bidding purposes only and may be changed with the approval of the Engineer.

C. Pull Boxes

1. A pull box shall always be installed in combination with steel strain type poles, signal mast arm type poles, at other locations specified on the plans, and as ordered by the Engineer. The Contractor may install, at their own expense, any additional pull box that is desired to help facilitate the work.
2. Special pull boxes that are required shall be fabricated and installed in general conformance with the size and details shown on standard drawings.
3. Pull boxes installed in finished areas shall be designed for such installations and shall be stackable and manufactured of a pre-cast polymer concrete material, such as Quazite or an approved equal. Unless otherwise noted, pull box lids shall have the word “Traffic” cast into them. Pull boxes shall be installed so that the covers are level with curb or sidewalk grade or level with the surrounding ground when no grade is established. The bottom of all pull boxes shall be bedded in 12” of crushed rock and covered with woven wire (refer to CDOT standards).
4. When a new conduit run enters an existing pull box, the Contractor shall remove the pull box or tunnel under the side at no less than 18” and enter from the direction of the run. No new conduit will be allowed to enter a new or an existing pull box in any other manner than that shown on the standard drawings.
5. Loop detector pull boxes (water-valve type) installed in the street shall be placed according to the plans or as directed by the Engineer. The lids shall have the word “Traffic” cast into them.

D. Loop Detector Wire Installation

1. Each detector loop shall consist of one continuous wire with no splices. To minimize necessary sawcutting, a water valve type housing is permitted to transition sawcut to conduit. No splicing is permitted in the valve box.
2. All loops shall have a tag attached to the leading clockwise lead of the loop. This tag shall be marked to indicate the relative location of the loop. This marking shall correspond directly to the phase designations on the intersection drawing provided in the contract.
3. Detector loop roadway slots shall be cut in asphalt that has a 6” minimum depth and sealed to within 1/4” of the surface level of the roadway with 3M sealant or approved equal. This sealer is to be used whether or not the roadway is to be overlaid. For pavement depths less than 6”, the Contractor shall use preformed loop installation using a method pre-approved by the Engineer prior to installation of the loop.

E. Conductor and Cable

1. Wiring shall conform to appropriate articles of the National Electric Code. Wiring within cabinets, junction boxes, etc., shall be neatly arranged and labeled appropriately.
2. Powdered soap stone, talc, or other approved lubricant shall be used in placing conductors in conduit.
3. A common neutral conductor, separate from the signal light circuit neutral, shall be used for all low-voltage circuits, including the detectors and pedestrian push-button circuits.
4. Splicing of cable will not be permitted in conduit or pull boxes or outside signal heads, standards, or foundations.
5. In no case shall any shellac compounds be used for splicing. Wire nut type connectors shall not be used. All wire connections shall use crimps and insulating covers. Detector loop lead-in splices in underground systems shall be waterproofed with 3M splice kits or City approved equivalent. A minimum of 12” of slack shall be left at each splice, except within hand-holes where 24” shall be left.
6. When conductors and cables are pulled into the conduit, all ends of conductors and cables shall be taped to exclude moisture and shall be so kept until the splices are made or terminal appliances attached. Ends of spare conductors shall be taped and marked.
7. Cable shall be stranded. For span wire type installations, cable shall be installed where specified on the plans and secured to messenger cable with cable rings in accordance with standard practices. Aerial cable shall be supported by strand vices of proper size and strength, as well as insulators used where necessary.
8. A small permanent tag on which the direction and phase are printed, using the codes given in the “Cable Schedule” below, shall be securely attached near the end of each conductor at each controller, standard, or pull box where conductors are separated. The phase designation, as shown on the intersection plans, shall also be printed on the tag, i.e., “Ø1 NBLT” where Ø1 is the phase number. Signal cables shall be labeled with colored electrical tape based on the following cable schedule:

Cable Schedule

Direction	Tape Color
1. NBLT	Red/White
2. NB	Red
3. SBLT	Green/White
4. SB	Green
5. EBLT	Orange/White
6. EB	Orange
7. WBLT	Blue/White
8. WB	Blue
9. Pedestrian	Yellow

NOTE: This is a typical cable schedule and shall be used for the wiring of all signal installations. A new cable schedule will be noted on the plans at each intersection where different phasing and/or special equipment is required. It should be noted that a band of white is used to indicate a left turn and yellow is used to indicate pedestrian movement. This is in addition to directional tape for the phase. For cable size and number of conductors, see the traffic signal material specifications and/or standard drawings.

9. Signal phase wiring shall be accomplished in the following manner:
   a. Each signal phase shall be in a separate cable, and there shall be a minimum of two spare conductors from the controller cabinet to the base of each pole.
   b. Signal cable from the controller cabinet to the base of each pole shall be continuous and shall be an IMSA 20-conductor cable.
   c. The following wiring scheme shall be used for 20-conductor cable:

Conductor Color	Main Street Signal Interval	Conductor Color	Side Street Signal Interval
Red	Red	Red/Black	Red
Orange	Yellow	Orange/Black	Yellow
Green	Green	Green/Black	Green
Red/White	Red Arrow	Black	Red Arrow
Orange/Red	Yellow Arrow	White/Black	Yellow Arrow
Green/White	Green Arrow	Blue	Green Arrow
Black/White	Don’t Walk	Black/Red	Don’t Walk
Blue/White	Walk	Blue/Red	Walk
White	Neutral	Blue/Black	Spare
White/Red	Neutral	Red/Green	Spare

Note: When splicing signal conductors, match conductor colors.

d. Each signal head shall have its own 7-conductor or 5-conductor signal cable to the base of the signal pole on which it is mounted, with the exception of same-phase signal heads on span wire that may be wired in series.

e. The following wiring scheme shall be used for 7-conductor and 5-conductor cable:

Conductor Color	Signal Interval	
	7-Conductor IMSA Cable	5-Conductor IMSA Cable
Red	Red	Red
Orange	Yellow	Yellow
Green	Green	Green
Blue	Walk	Not Available
Black	Don't Walk	Spare
White	Vehicle Neutral	Vehicle Neutral
White/Black	Pedestrian Neutral	Not Available

Note: When splicing signal conductors, match conductor colors.

10. Luminaire power cable shall be continuous from the controller cabinet pull box to the base of each signal pole and from the base of each signal pole to the luminaire.

F. Bonding and Grounding

1. Metallic cable sheaths, conduit, metal poles, and foundations shall be made mechanically and electrically secure to form a continuous system and shall be effectively grounded. Bonding and grounding jumpers shall be copper wire, No. 8 AWG, for all systems. Beldon cable sheath for loop detectors to be grounded in control cabinet only. The other end of the sheath is to be left ungrounded. Incomplete statement?
2. Bonding of standards shall be by means of a bonding wire attached to a bolt or a 3/16" or larger bolt installed in the lower portion of the shaft.
3. At each pull box, the ground electrode shall be a one-piece copper ground rod of 5/8" diameter and 8' in length, driven into the ground so that the top is 2" above the bottom of the pull box. The ground rod connector will be placed so that the bare copper wire, No. 8, can be pulled into a pole, foundation, or attached to the control cabinet ground bus.

G. Maintenance

The Contractor shall have full maintenance responsibility of the existing traffic signal, if one exists, from the date of the notice to proceed from the City to the date of final acceptance of the work performed. The Contractor shall provide continuous maintenance and emergency service 24 hours a day during the time frame outlined above. The Contractor shall provide and maintain a 24-hour telephone answering service during this same time frame. All malfunctions of a controller

and its accessory equipment shall be considered an emergency unless otherwise identified by the City. Equipment malfunctions and/or damage, which, in the opinion of the City Traffic Engineer or other authorized person, constitutes a serious hazard or inconvenience to the public, shall be considered an emergency. Such malfunctions or damage may include, but not necessarily be limited to, situations where:

1. All indications are out, including bulbs, LEDs, and lenses for any one traffic movement;
2. Signal heads giving conflicting indications to any intersection approach;
3. A signal has been knocked down; or
4. An overhead red indication is out

The Contractor shall undertake each emergency repair no later than 1 hour after the City notifies the Contractor of the emergency.

In instances where repairs are not of an emergency nature, such repairs shall be undertaken at the site within one working day after the City notifies the Contractor of the needed repair. The City shall pay the Contractor for the materials, parts, and/or supplies actually used by the Contractor in making any such repair in the amount of the Contractor's cost plus 5 percent. Labor and equipment rates associated with work performed due to vandalism or vehicle accident damage will be reimbursed at the rate set forth in the City's Traffic Signal Maintenance Contract. All warranties shall be in effect and enforced.

Should the Contractor fail to perform any maintenance responsibilities within the prescribed time periods, the City Traffic Engineer or other authorized person shall use the services of the City's designated Traffic Signal Maintenance Contractor to perform said maintenance work. The Contractor shall reimburse the City for labor and equipment charges associated with the use of the City's designated Traffic Signal Maintenance Contractor plus a 15 percent administration fee.

The Contractor shall be responsible for all maintenance and emergency repairs for work performed as part of the contract, which shall not be paid for separately, but shall be included in the cost of the work.

H. Field Testing

Before completing the work, the Contractor shall conduct the following tests on all traffic signals in the presence of the City Traffic Engineer or their designee:

1. A visual inspection of all wiring will be conducted.
2. Each circuit shall be tested for continuity and for grounds.
3. The signal shall be placed in a mandatory 3- to 5-day flashing period immediately before conducting the functional test, as described in the next section. The start of the flashing period shall not occur on a Friday, Saturday, or Sunday, and the signal shall flash for a minimum of 3 working days before the functional test is initiated.

4. Following a successful mandatory flashing period, a functional test shall be made in which it is demonstrated that each and every part of the system functions as specified or intended herein. The functional test for each traffic signal system shall consist of not less than 14 days of continuous, satisfactory operation commencing with full operation of all electrical facilities. During the 14-day period, the Contractor will maintain the system or systems. The cost of any maintenance necessary, except electrical energy and maintenance due to damage by public traffic, shall be borne by the Contractor and will be considered as included in the price paid for the contract item involved, and no additional compensation will be allowed.

3. Traffic Signal Heads

A. Vehicle Signal Heads

1. All vehicle signal heads shall be of the individual section, adjustable type, and black polycarbonate. Standard signal heads shall be McCain, Eagle, or approved equivalent. Unless otherwise noted on the plans, all signal and pedestrian displays shall be ITE approved Light Emitting Diodes (LED) and conform to the appropriate sections below.
2. Visors shall be detachable tunnel type, open at the bottom, black in color on the outside, and flat black on the inside.
3. Reflectors shall be silvered glass or Alzak type units.
4. Lenses shall be in accordance with ITE Specifications.
5. Sockets shall be fixed focus.
6. Doors on the signal heads for the installation of lamps, lens replacement, or other maintenance shall not require use of any tool whatsoever to be opened. Doors and lenses shall be equipped with neoprene weatherproof gaskets to ensure against infiltration of moisture, road film, and dust. Each three-color signal unit shall have the socket leads from all signal sections connected to a terminal board stamped with identifiable terminals. There shall be a terminal for color indication, plus a common terminal where one lead from each socket shall terminate. The terminal board shall be mounted in the middle section and be properly insulated. All openings, top and bottom, shall be for 1/2” pipe or pipe mounting brackets. Gaskets shall be supplied for top and bottom openings.

B. Pedestrian Signal Heads

1. All pedestrian signal indications shall be symbolized messages, countdown indication, and LED. All heads shall be single-section, black, and clamshell mounting. Standard pedestrian signal heads shall be Indicator Controls Corporation, or approved equivalent.

C. Signal Head Back Plates

1. Where shown on the plans, black back plates shall be furnished and installed on signal faces. No background light shall show between the back plates and the signal face or between sections. All back plates are to be of aluminum or plastic construction and shall be the louvered type. Back plates shall provide a 5” border for all 12” signal heads.

2. Traffic signal heads requiring back plates shall be drilled for 3/16” diameter by ½” pan-head bolt with nut and lock washer. If the manufacturer fails to supply as described, it will then be the Contractor’s responsibility to do so. When installing back plates on the traffic signal head, the Contractor will furnish 3/16” fender washers between bolt head and back plate.
3. The manufacturer will fabricate all back plates with a 3/16” washer on both sides of each rivet to hold each section of the back plate together.

D. LED Optical Unit

1. LED traffic signal section optical units shall meet or exceed the most recently adopted ITE vehicle and pedestrian signal module specifications. In addition, all LED indications shall be Intertek ETL Verified compliant.
2. LED modules shall have an incandescent appearance, which means that the indication shall appear to the motorist as totally uniform in illumination and have a viewing angle that allows the LED to be installed on wide approaches and single-tethered span wire. Each module shall be furnished with all materials necessary to allow installation in new and/or existing signal housings. In addition, LED modules shall conform to the following requirements:

    a. LED ball signal modules, 12 inch, shall be fully compliant to the ITE VTCSH LED Circular Supplement specification dated June 27, 2005. LED arrow signal modules shall be fully compliant with the ITE VTCSH LED Vehicle Arrow Traffic Signal Supplement dated July 1, 2007. LED pedestrian signal modules shall be fully compliant with the ITE PTCSI Part 2: LED Pedestrian Traffic Signal Modules Specification dated March 19, 2004.
    b. LED modules shall have a maximum total harmonic current distortion (THD) < 20 percent and a power factor > 90 percent. THD and power-factor requirements may be waived for products designed to operate at less than 14 watts. Operating voltage shall be between 85 and 130 VAC. Electronic circuitry shall assume proper operation of the load switch and monitor in the control cabinet. The minimum number of LEDs per module shall be as specified by the manufacturer to meet ITE luminance specifications for signal installation. Enclosures shall be dust and water resistant. The LED module shall be capable of operating between -40 ºF and +165 ºF. Candlepower distribution shall meet minimum ITE specifications. Intensity shall be measured uniformly across the face of the lens. Brightness shall be maintained in the event of voltage fluctuations or voltage drops.

E. LED Circuit Configuration

1. The failure of a single LED shall cause loss of light from only that single LED. In balls and arrows, no more than 1 percent of the total luminosity of the entire signal module shall be lost in the event of a single string failure. The control circuitry shall prevent current flow through the LEDs in the off state to avoid any false indication as may be perceived by the human eye, during daylight and evening hours. The LED signal module shall be operationally compatible with NEMA TS-1 and NEMA TS-2 conflict monitoring parameters. The intensity of the LED

signal module shall not vary by more than 10 percent over the allowable voltage range as specified above.

F. Signal Head Lenses

1. The lens of a signal head shall be replaceable, polycarbonate (UV stabilized "Lexan") and shall meet ITE color standards. The lens shall be a minimum 1/8" thickness with minimum light transmittance of 92 percent. The lens shall be free from bubbles, flaws, and other imperfections. Non-polycarbonate tinted lenses will be accepted, provided that they meet ITE color standards. Chromacity shall be measured uniformly across the face of the lens. Non-polycarbonate lenses shall also meet 3½' drop tests. The outside face of the lens shall be smooth. Grooves, ridges, or both that may be used to enhance optical characteristics of the LED indication shall be located on the inside face of the lens.

G. Pedestrian Signal Modules

1. Pedestrian signal LED shall be a single, self-contained unit for 16x18 clamshell housing and shall include a countdown timer.
2. Walk/Don't Walk indications shall be 11" high and solid (filled in) Lunar White "Man" and Portland Orange "Hand" symbols in an overlay configuration.
3. Countdown timer shall be 9" high, double-digit numerals in a 2-row LED red display.
4. Timing shall be derived directly from the controller when connected to the pedestrian signal field wires. The timer module shall continuously monitor the pedestrian signal operation for any changes in the timing and shall reprogram itself in response to any changes. The countdown timer shall blank out the display during initial learning and during the walk interval.
5. Countdown timer shall have full preemption compatibility.
6. Pedestrian signal lens shall have a consistent visual appearance such that a ghost image of the Hand or Person is not visible while the indication is inactive.

H. Manufacturer's Warranty

1. The manufacturer's warranty shall guarantee the repair or replacement for 5 years covering all failures except for accidental damage.

4. Electrical Cable

A. Signal Cable

1. Signal cables shall be 14 AWG multiconductor stranded copper wire manufactured to meet International Municipal Signal Association (IMSA) 19-1 specifications or an approved equivalent. Each conductor in the cable will be individually insulated and rated at 600 volts. There shall be a minimum of 4 and a maximum of 9 strands per conductor. There shall be a separate 20-conductor cable installed from the controller cabinet to the bottom hand hole of

each signal pole. From that point, a separate 5- or 7-conductor cable for each vehicle or pedestrian signal head shall be spliced to the 20-conductor cable.

B. Interconnect Cable

1. Unless otherwise specified, all traffic signal interconnect communications shall be accomplished through a fiber optic cable system. Provisions for the fiber optic system shall be annotated on the plans or described by supplemental specifications.

C. Inductance Loop Detectors

1. Detector Wire
   a. DETECTA-DUCT Cable or approved equivalent consisting of single conductor No. 14 stranded THHN with an outer protective sleeve.

2. Lead-In Cable
   a. Detector loop lead-in (home run) cable shall be a four-conductor 0.25” diameter, shielded and jacketed cable suitable for installation in a pavement saw cut, conduit or direct burial (Global Traffic Technologies, Canoga 30003 type cable, or approved equivalent).
   b. Conductors shall be AWG No. 18 stranded copper with polypropylene insulation.
   c. The conductors shall be twisted at least six turns per foot. Color rotation shall be black, red, white, and green.
   d. The interior of the cable shall be filled with an amorphous material to prevent water penetration. Aluminized polyester shielding shall be applied around the conductors to prevent electromagnetic interference.
   e. The cable jacket shall consist of black high-density polyethylene. The jacket shall not be degraded by prolonged exposure to typical pavement runoff components.
   f. Inductance shall be approximately 23 mH/100 feet for diagonal pairs.
   g. Capacitance shall be 30 pf/ft for adjacent pairs and 27 pf/ft for diagonal pairs (with all others disconnected).
   h. The cable shall be suitable for prolonged operation in extreme environmental temperatures of -65°F to 176°F.

D. Optical Detector Lead-In Cable

1. Lead-in cable for the Emergency Vehicle Optical Detectors shall be 3M Type 138 or approved equivalent.

E. Pedestrian Push Button Cable

1. Two conductor No. 14, seven strands, tinned, soft-drawn copper wire, 1/16” neoprene insulation.
2. Conductors to be twisted. Color coded one white and one black.

F. Service Cable

1. Two No. TRW-8, seven strands, tinned, soft-drawn copper wire, 1/16" neoprene insulation, black and white in color.

G. Ground

1. Single conductor, No. 8 AWG, soft-drawn bare copper wire.

5. Traffic Signal Vehicle Detectors

A. Vehicle Detectors - General

1. ***Unless otherwise noted, all traffic signal vehicle detection systems shall be accomplished through a video camera system (refer to following section)***. The remaining portions of this section reference roadway imbedded inductive loop systems and are applicable when specified. This specification defines the minimum design operational and performance requirements for multiple channel, digital self-tuning inductive loop detectors. Detector units shall be card rack mounted plug-in type and operate from an external 24 VDC power supply. Detector units shall be in full compliance with the environmental and size requirements of NEMA standard TS1-Section 15 and meet the design, operation, electrical, and functional performance requirements of both TS1 and TS2 specifications.
2. The front panel shall include an erasable write-on channel identification area and a clearly indicated switch operating position. ID area 1 centimeter square per channel minimum.
3. All component parts and test points shall be clearly identified by permanent markings of circuit referenced on the PC Board. Integrated circuit devices having 16 or more leads shall be socket-mounted to facilitate repair and maintenance of units. The supplier shall warrant the detectors supplied to this specification to be free of defects in materials and workmanship for a period of 5 years from the date of shipment from manufacturer.
4. Each detector unit shall include two or four complete detector channels. Each channel shall sequentially energize its loop inputs to eliminate crosstalk (mutual coupling) between large, very closely spaced adjacent loops connected to the same unit. The sequential time sharing and digital processing of loop inductance data shall be accomplished on a single LSI microcircuit per unit for maximum reliability. The method of measuring shall be crystal reference digital period counting and multi-channel scanning. Only one channel input per unit shall be active at any point in time.
    a. Sequential scanning shall fully prevent crosstalk between channels of a detector connected to closely spaced or overlapped loops for directional detection.
    b. Sequential scanning shall allow two detection channels to operate with full performance using a common homerun cable.
    c. Sequential scanning shall allow two or more detection channels to be connected to a single detection amplifier with full operating performance, including separate mode and sensitivity selection capability on each channel.

5. Each channel of the sensor unit shall automatically self-tune to any loop and lead-in inductance from 20 to 2500 mH within 2 seconds with full sensitivity after application or interruption of supply voltage. Units shall also track changes in loop/lead-in electrical characteristics, as might reasonably be expected to occur in undamaged loops, properly installed in sound pavements, without producing false indications or changes in sensitivity.
6. Each detector unit shall be provided with a loop test switch position to verify loop system integrity and reduce maintenance costs. The "open loop test" position shall indicate a previous fault via the front panel indicator. The memory shall remain intact and can be queried repeatedly. Existing detections shall not be reset and the memory shall only be reset by power interruptions as by removing and re-inserting the plug-in detector units.
7. Each channel shall include a 16-position push type wheel switch to allow selection of 8 pulse sensitivities, 7 presence levels, and a "Reset" and an "Off" position. Each detector unit shall include 8 sensitivity selections in 2:1 steps that can be correlated to the relationship of the number of turns of wire in a loop versus the sensitivity required to detect a specified vehicle. The selections shall be designated to allow detection of licensable vehicles in loops of two or more turns electrically in series, parallel or series/parallel configuration in non-reinforced or reinforced pavements with lead-in/homerun combinations from 50' to 1,000'. The number of turns in a loop, electrical configuration of multiple loops, and pavement type will dictate the sensitivity required for proper predictable detection.
8. If specified, channel presence time shall be modified if delay or extension time is selected. The timing switch shall select delay or extension or "Off," if no timing is desired. Internal DIP switches shall provide for selection of "Delay" time of 0 to 31 seconds in 1.0 second increments and "Extension" time of 0 to 7.75 seconds in 0.25 second increments.
9. Presence indicators shall be wide angle, high brightness type LED suitable for sunlight visibility. When timing is selected and a channel is active, that channel's indicator shall flash at 4 Hz during Delay and at 16 Hz during Extension to indicate timing is in progress. Further, the timing shall be aborted when the vehicle is no longer present and/or the channel control input shall become inactive. The Delay timer shall be reset when a vehicle leaves the loop prior to time out and shall abort when the control input becomes inactive. The Extension timer shall operate and reset when a vehicle leaves the loop and be aborted when the control input becomes inactive. Each timer (Delay and Extension) shall be provided with buffer circuitry to enable or disable the timer, based on an external input (green gate) signal. The circuit shall be designed for AC or DC input control on AC powered units and for DC control on DC powered units.
10. Each detector unit shall use a ^L = (Delta-L) thresholding technique to provide a more constant predictable vehicle detection sensitivity with series added inductance, i.e., many loops connected in series and/or long lead-in/homeruns will generally require the same sensitivity setting as would be required for a single loop with short lead-in to simplify setup.
11. Each channel shall automatically recover from intermittent opens or multiple shorts to ground. Each channel shall tolerate and continue to operate with no change with a single

point short to ground on the loop or lead-in system. Each channel shall provide a continuous, non-resettable (fail-safe) output and indication in response to an open loop/open lead-in system. The open loop indication and output shall not be resettable as long as the open exists, except that they shall be defeated when the channel "Off" position is selected.

12. Extended features shall include two serial ports (front panel RS232 and Edge connector Xmit/Recve), TS1 and TS2 compatible from manual or software switch, microloop occupancy detection, traffic counting capable to include long-loop presence count from 15 minute to infinite intervals all accessible from either serial interface, Dual Detect, and Fault LED indicators per channel, External inputs to control Timing functions and enable Remote Reset, Extended diagnostics, programming and Live status available via serial interface utilizing windows compatible software.

B. Vehicle Detectors – General

Add Specification if available from City of Centennial

C. Emergency Vehicle Detectors

1. Optical Communication Detectors for emergency vehicle pre-emption shall be Global Traffic Technologies (GTT) Model 711, 721 or 722 Optical Detector or approved equivalent, as specified in the construction plan notes. The Engineer shall determine placement of the detectors.
2. Optical phase selector modules for emergency vehicle pre-emption shall be GTT Model M752 or approved equal.

D. Pedestrian Push Button Detectors – General

1. Pedestrian push buttons shall be of the direct push button contact type. They shall operate on a voltage not to exceed 18 volts AC. They shall be of tamper-proof design and equipped with a push button instruction sign as shown in the Standard Details.
2. The push-button assembly shall be black and weatherproof.
3. The housing shall be shaped to fit the curvature of the pole to which it is attached to provide a rigid installation. Saddles shall be provided to make a neat fit when required.
4. Pedestrian signs shall be installed as shown on the Standard Details.
5. Push buttons shall be ADA approved and shall be located in accordance with ADA reach specifications.

6. Traffic Signal Poles, Pedestals, and Mast Arms

A. General

1. Traffic signal poles, pedestals, and mast arms shall conform with the general configuration shown on the standard drawings.

B. Paint – Signal Poles

1. New Structures

   a. All new signal poles, mast arms, and luminaire arms shall be received from the manufacturer with a powder-coat-over-galvanized finish and securely wrapped in ultraviolet-inhibiting plastic and foam to prevent abrasions during shipping.
   b. All poles, mast arms, and luminaire arms shall be hot-dip galvanized and the surfaces prime-coated with a zinc rich epoxy powder and then top-coated with a polyester powder. Surface preparation shall be per the manufacturer's specifications to achieve galvanized and powder-coat treatment, which shall be approved by the City Traffic Engineer as part of the approval of shop drawings prior to fabrication.
   c. Zinc-rich epoxy powder prime coat shall be applied to all exterior surfaces to a minimum dry film thickness of 3.0 mils. The bottom 8' of the pole shaft shall have a minimum dry film thickness of 6.0 mils. The polyester powder top coat shall be applied to all primed exterior surfaces to a minimum dry film thickness of 3.0 mils. Powder-coat shall be electrostatically applied. The top-coat finish shall be high-gloss black.
   d. Any surface areas damaged during handling or installation shall be repaired immediately with a spot coat of epoxy primer and a high-gloss black polyurethane paint. The paint manufacturer's application instructions shall be followed.
   e. All paint and visible films shall be black.

2. Existing Structures

   a. All designated previously installed signal poles and mast arms shall be field painted. All exterior surfaces shall be cleaned and examined for damaged paint, and any such damage shall be given a spot coat of primer and the entire exterior surface repainted.
   b. Previously painted surfaces, whether finish or prime coats, shall be scuff sanded to yield 500 psi of adhesion with particular attention paid to the lower 8' of the pole. Inspection of the poles prior to application of the finish coat is required.
   c. A finish coat of Sherwin Williams DTM (Direct to Metal) Acrylic Gloss or approved equal shall be applied over the primer or previously painted surfaces. Two coatings shall be applied leaving approximately 6 mils of dry film. The color shall be a high-gloss black.
   d. The painting shall be done in a neat and workmanlike manner and may be applied either by hand brushing or spraying. The Engineer reserves the right to require the use of brushes for the application of paint should the work done by the paint spraying machine prove unsatisfactory or objectionable.

7. Traffic Signal Controller and Cabinet Equipment

A. General

1. This specification sets forth the minimum requirements for a TS2 Type 1 traffic control modular cabinet assembly. The cabinet assembly shall meet, as a minimum, all applicable sections of the NEMA Standard Publication No. TS2-1998. Where differences occur, this specification shall govern.

2. A controller shall consist of a complete electrical mechanism to control the operation of traffic control signals, including the timing mechanism and all necessary auxiliary equipment. Controllers shall be Econolite Cobalt. All equipment furnished shall be the manufacturers' current production model, complete with all standard accessories, tested and delivered by a domestic manufacturer who is regularly engaged in the construction of such equipment. Each cabinet shall be furnished with full eight phase capability (loop amps, load switch, etc.) regardless of specific intersection design with the exception of mid-block and fire signals.
3. All electrical conduits running to the control cabinet shall enter from the bottom only, except as noted on the plans. No holes shall be drilled in any part of the cabinet other than the bottom, unless otherwise called for on the plans.
4. All controller cabinets and control equipment shall be factory wired, ready for operation. The Contractor shall test cabinet and controller in their shop prior to installation. Field work will be limited to placing cabinets and equipment and connecting field wiring to field terminal strips. All cabinet wiring shall be neat and firm.
5. Controller cabinets shall be furnished with all mounting hardware.
6. Power protection devices shall include the main AC+ power circuit breaker, radio interference suppressors, and lightning and surge protectors. These devices shall be in addition to any protective devices furnished with the controller and auxiliary equipment housed within the cabinet and shall be provided on the load side of the circuit breakers. All devices shall be mounted to the interior wall or the cabinet in the approved manner.
7. If called for in the plans, controller cabinets shall be equipped for and wired for two Opticom card rack mounted GTT Model 752 phase selectors. The selector cards, field wiring, and detectors shall not be supplied unless called for in the plans.
8. Opticom detectors and phase selectors, when called out in the plans, shall be measured and paid for under the pay items “GTT Opticom Detectors (Model 711, 721, 722), each; or GTT Opticom 2 Channel Discriminator Card (Model 752), each;” and shall include all labor, equipment, and materials necessary to install the item complete-in-place.

B. Cabinet Design and Construction

1. The cabinet shall be constructed from Type 5052-H32 aluminum with a minimum thickness of 0.125”.
2. The cabinet shall be designed and manufactured with materials that will allow rigid mounting, whether intended for pole, base, or pedestal mounting. The cabinet must not flex on its mount.
3. A rain channel shall be incorporated into the design of the main door opening to prevent liquids from entering the enclosure. The cabinet door opening must be a minimum of 80 percent of the front surface of the cabinet. A stiffener plate shall be welded across the inside of the main door to prevent flexing.

4. The top of the cabinet shall incorporate a 1” slope toward the rear to prevent rain accumulation.
5. Unless otherwise specified, the cabinet surface shall be brushed aluminum.
6. All seams shall be sealed with RTV sealant or equivalent material on the interior of the cabinet.
7. All cabinets shall be supplied with a minimum of one removable shelf manufactured from 5052-H32 aluminum to hold the controller and Malfunction Management Units (MMUs). A second shelf also manufactured from 5052-H32 aluminum shall be installed toward the top of the cabinet. This removable shelf shall hold the detector card rack with ample room for the power supply. Shelves shall be a minimum of 10” deep.
8. The shelves shall have horizontal slots at the rear and vertical slots at the front of the turned down side flange. The shelves shall be installed by first inserting the rear edge of the shelf on the cabinet rear sidewall mounting studs, then lowering the shelf on the front sidewall mounting studs. The shelves shall be held in place by a nylon tie-wrap inserted through holes on the front edge of the shelf and around the front sidewall mounting studs.
9. The front edge of the shelves shall have holes punched every 6”, to accommodate tie-wrapping of cables/harnesses.
10. A minimum of one set of vertical "C" channels shall be mounted on each interior wall of the cabinet for the purpose of mounting the cabinet components. The channels shall accommodate spring mounted nuts or studs. All mounting rails shall extend to within 7” of the top and bottom of the cabinet. Sidewall rail spacing shall be 7.88” center-to-center. Rear wall rail spacing shall be 18.50” center-to-center.
11. The main door and police door-in-door shall close against a weatherproof and dust-proof, closed-cell neoprene gasket seal. The gasket material for the main door shall be a minimum of 0.250” thick by 1.00” wide. The gasket material for the police door shall be a minimum of 0.25” thick by 0.50” wide. The gaskets shall be permanently bonded to the cabinet.
12. The lower section of the cabinet shall be equipped with a louvered air entrance. The air inlet shall be large enough to allow sufficient air flow per the rated fan capacity. Louvers must satisfy the NEMA rod entry test for 3R ventilated enclosures. A non-corrosive, vermin- and insect-proof, removable air filter shall be secured to the air entrance. The filter shall fit snugly against the cabinet door wall.
13. The roof of the cabinet shall incorporate an exhaust plenum with a vent screen. Perforations in the vent screen shall not exceed 0.125” in diameter.
14. The main door on a “P44” cabinet shall be equipped with a three-point latching mechanism.
15. The handle on the main door of a “P44” cabinet shall use a shank of 5/8” minimum diameter. The handle on the main door of a “Pole Mount” cabinet shall use a shank of 7/16” minimum diameter. The handle shall include a hasp for the attachment of an optional padlock. The cabinet door handle shall rotate counter-clockwise to open. The handle shall not extend beyond the perimeter of the main door at any time. The lock assembly shall be positioned so that the handle shall not cause any interference with the key when opening the cabinet door.

16. The main door hinge shall be a one-piece, continuous piano hinge with a stainless steel pin running the entire length of the door. The hinge shall be attached in such a manner that no rivets or bolts are exposed.
17. The main door of a "P44" cabinet shall include a mechanism capable of holding the door open at approximately 90°, 125°, and 150° under windy conditions. Manual placement of the mechanism shall not be required by field personnel. The main door of a "Pole Mount" cabinet shall include a mechanism capable of holding the door open at approximately 90° and 150° under windy conditions.
18. The main door shall be equipped with a Corbin tumbler lock number 1548-1 or exact equivalent. Minimum of two keys shall be supplied.
19. The police door-in-door shall be provided with a treasury type lock Corbin No. R357SGS or equivalent and a minimum of two keys.
20. All base mounted cabinets require anchor bolts to properly secure the cabinet to its base. The cabinet flange for securing the anchor bolts shall not protrude outward from the bottom of the cabinet. For "P44" cabinets, four anchor bolts shall be required for proper installation.
21. Each cabinet shall be of sufficient size to accommodate all equipment. At a minimum, cabinet sizes are as follows:

    - 32" H x 20" W x 14" D - (Pole Mount cabinet)
    - 52" H x 44" W x 24" D - (P44 cabinet)

C. Terminals and Facilities – Main Panel Design and Construction

1. The main panel shall be constructed and installed to minimize flexing when plug-in components are installed.
2. All 4-, 8-, 12-, and 16-position main panels are provided with a mounting mechanism that allows easy access to all wiring on the rear of the panel without the removal of any cabinet shelves. Lowering or completely removing the main panel can be accomplished without using hand tools.
3. The terminals and facilities shall be available as a minimum in the following configurations:
    a. Configuration #1 – Four load switch sockets, two flash transfer relay sockets, one flasher socket, one Bus Interface Unit (BIU) sockets (expandable to two) with one BIU for each socket, one 8-channel detector rack with one BIU, and one Type-16 MMU.
    b. Configuration #2 – Eight load switch sockets, four flash transfer relay sockets, one flasher socket, one BIU sockets (expandable to two) with one BIU for each socket, one 8-channel detector rack with one BIU, and one Type-16 MMU.
    c. Configuration #3 – Twelve load switch sockets, six flash transfer relay sockets, one flasher socket, two BIU sockets with one BIU for each socket, one 16-channel detector rack with one BIU, and one Type-16 MMU.

d. Configuration #4 – Sixteen load switch sockets, six flash transfer relay sockets, one flasher socket, two BIU sockets with one BIU for each socket, one 16-channel detector rack with one BIU, and one Type-16 MMU.

4. All load switch and flash transfer relay socket reference designators shall be silk-screen labeled on the front and rear of the main panel to match drawing designations. Socket pins shall be marked for reference on the rear of the panel.
5. A bracket shall support all load switches, extending at least half the length of the load switch.
6. Rack style mounting shall be provided to accommodate the required BIUs per the configuration listed in **Section 6.3** above. A dual-row, 64-pin female DIN 41612 Type B connector shall be provided for each BIU rack position. Card guides shall be provided for both edges of the BIU. Terminal and facilities BIU mounting shall be an integral part of the main panel. Detector rack BIU mounting shall be an integral part of the detector rack.
7. All BIU rack connectors shall have pre-wired address pins corresponding to the requirements of the TS2 specification. The address pins shall control the BIU mode of operation. BIUs shall be capable of being interchanged with no additional programming.
8. All field output circuits shall be terminated on a non-fused barrier type terminal block with a minimum rating of 10 amps.
9. All field input/output (I/O) terminals shall be identified by permanent alphanumerical labels. All labels shall use standard nomenclature per the NEMA TS2 specification.
10. It shall be possible to flash either the yellow or the red indication on any vehicle movement and to change from one color indication to the other by using a screwdriver.
11. The main panel shall contain at least one flasher socket (silk-screen labeled) capable of operating a 15-amp, 2-pole, NEMA solid-state flasher. The flasher shall be supported by a bracket extending at least half its length.
12. One RC network shall be wired in parallel with each group of three flash-transfer relays and any other relay coils.
13. All logic-level, NEMA-controller and MMU input and output terminations on the main panel shall be permanently labeled. Cabinet prints shall identify the function of each terminal position.
14. Connecting cables shall be sleeved in a braided nylon mesh or poly-jacketed. The use of exposed tie-wraps or interwoven cables is unacceptable.
15. All Terminals and Facilities configurations shall be provided with sufficient RS-485 Port 1 communication cables to allow the intended operation of that cabinet. Each communication cable connector shall be a 15-pin metal shell D subminiature type. The cable shall be a shielded cable suitable for RS-485 communications.
16. All main panels shall be pre-wired for a Type-16 MMU.
17. All wiring shall be neat in appearance. All cabinet wiring shall be continuous from its point of origin to its termination point. Butt type connections/splices are not acceptable.

18. All connecting cables and wire runs shall be secured by mechanical clamps. Stick-on type clamps are not acceptable.
19. The grounding system in the cabinet shall be divided into three separate circuits: AC Neutral, Earth Ground, and Logic Ground. These ground circuits shall be connected at a single point as outlined in the NEMA TS2 Standard.
20. The main panel shall incorporate a relay to remove +24 VDC from the common side of the load switches when the intersection is placed into mechanical flash. The relay shall have a momentary push button to apply power to the load switch inputs for ease of troubleshooting.
21. All pedestrian push button inputs from the field to the controller shall be opto-isolated through the BIU and operate at 12 VAC.
22. All wire (size 16 AWG or smaller) at solder joints shall be hooked or looped around the eyelet or terminal block post before soldering to ensure circuit integrity. Lap joint soldering is not acceptable.

D. Power Panel Design and Construction

1. The power panel shall consist of a separate module securely fastened to the right side wall of the cabinet. The power panel shall be wired to provide the necessary filtered power to the load switches, flasher(s), and power bus assembly. The power panel shall have a removable plastic front cover of such design to allow a technician to access the main and auxiliary breakers without removing the front cover.
2. The power panel shall house the following components:

    a. A minimum of a 40-amp main breaker for 12- or 16- position cabinets or a minimum of a 30-amp breaker for 4- or 8-position cabinets. This breaker shall supply power to the controller, MMU, signals, cabinet power supply, and auxiliary panels. Breakers shall be at a minimum, a thermal magnetic type, UL listed for HACR service, with a minimum of 10,000 amp interrupting capacity.
    b. A minimum of a 15-amp auxiliary breaker. This breaker shall supply power to the fan, light, and GFI utility outlet.
    c. An EDCO model SHP-300-10 or exact approved equivalent surge arrester.
    d. A 50 amp, 125 VAC radio interference line filter.
    e. A normally-open, 60-amp mercury contactor Durakool model BBC-7032 or exact equivalent.
    f. A minimum of 8-position neutral bus bar capable of connecting three #12 wires per position.
    g. A minimum of 6-position ground bus bar capable of connecting three #12 wires per position.
    h. A NEMA type 5-15R GFI utility outlet.

E. Auxiliary Cabinet Equipment

1. The cabinet shall be provided with a thermostatically controlled (adjustable between 80° and 150° F) ventilation fan in the top of the cabinet plenum. The fan plate shall be removable with the use of simple hand tools for serviceability. A minimum of one exhaust fan shall be provided. The fan shall be a ball bearing type fan capable of drawing a minimum of 100 cubic feet of air per minute.
2. At minimum, a 40-watt incandescent refrigerator lamp and socket mounted on an aluminum bracket shall be mounted in the cabinet to sufficiently illuminate the field terminals. The lamp shall be wired to a door-activated switch mounted near the top of the door.
3. Alternately, a 25-watt incandescent lamp mounted on a 14-inch flexible arm shall be included. The flexible arm shall be permanently mounted to the middle of the cabinet door. The lamp shall be wired to a door-activated switch mounted near the top of the door.
4. Alternately, a fluorescent lighting fixture shall be mounted on the inside top of the cabinet near the front edge. The fixture shall be rated to accommodate at minimum a F15T8 lamp operated from a normal power factor UL or ETL listed ballast. The lamp shall be wired to a door-activated switch mounted near the top of the door.
5. A resealable print pouch shall be mounted to the cabinet door. The pouch shall be of sufficient size to accommodate one complete set of cabinet prints.
6. A minimum of two sets of complete and accurate cabinet drawings shall be supplied with each cabinet.
7. A minimum of one set of manuals for the controller, MMU. and vehicle detector amplifiers shall be supplied with each cabinet.

F. Vehicle Detection

1. A minimum of one vehicle detector amplifier rack shall be provided in each cabinet. Detector racks shall be available in two configurations:

   a. Configuration #1 – Shall support up to eight channels of loop detection (either four 2-channel detectors or two 4-channel detectors), two 2-channel preemption devices, and one BIU.
   b. Configuration #2 – Shall support up to 16 channels of loop detection (either eight 2-channel detectors or four 4-channel detectors), two 2-channel preemption devices, and one BIU.

2. Each cabinet shall contain detector interface panels for the purpose of connecting field loops and vehicle detector amplifiers.
3. One 8-position interface panel shall be provided for an 8-channel rack cabinet and one 16-position interface panel shall be provided for a 16-channel rack cabinet. The interface panel shall be secured to a mounting plate and attached to the left sidewall of the cabinet.

4. Each interface panel shall allow the connection of 8 or 16 independent field loops. A ground bus terminal shall be provided between each loop pair terminal to provide a termination for the loop lead-in cable ground wire.
5. Each interface panel shall provide a terminal block to terminate the field wires for up to two 2-channel preemption devices.
6. Lightning protection device mounting holes shall be provided to accommodate an EDCO SRA-16C, or EDCO SRA-6, or EDCO LCA-6, or a varistor lightning protection device.
7. All termination points shall be identified by a unique number and silk screened on the panel.
8. Each detector rack shall accommodate rack mountable preemption devices, such as EMTRAC or Opticom.

G. Cabinet Test Switches and Police Panel

1. A test switch panel shall be mounted on the inside of the main door. The test switch panel shall provide, as a minimum, the following:

    a. AUTO/FLASH SWITCH. When in the flash position, power shall be maintained to the controller and the intersection shall be placed in flash. The controller shall not be stop timed when in flash. If required by the plans and specifications, an optional RC network shall be provided to give the controller an external start pulse when the switch is returned to the auto position. This will force the controller to initiate the startup sequence when exiting flash.
    b. STOP TIME SWITCH. When applied, the controller shall be stop timed in the current interval.
    c. CONTROL EQUIPMENT POWER ON/OFF. This switch shall control the controller, MMU, and cabinet power supply AC power.
    d. COORD/FREE SWITCH. Cabinet wiring shall include provisions for COORD/FREE switch.
    e. Momentary test push buttons for all vehicle and pedestrian inputs to the controller.

2. The police door switch panel shall contain the following:

    a. SIGNALS ON/OFF SWITCH. In the OFF position, power shall be removed from signal heads in the intersection. The controller shall continue to operate. When in the OFF position, the MMU shall not conflict or require reset.
    b. AUTO/FLASH SWITCH. In the flash position, power shall not be removed from the controller and stop time shall be applied. If required by the plans and specifications, an optional RC network shall be provided to give the controller an external start pulse when switch is returned to the auto position. This will force the controller to initiate the startup sequence when exiting flash.
    c. AUTO/MANUAL SWITCH. Cabinet wiring shall include an AUTO/MANUAL switch and a momentary push button or hand cord.

3. All toggle type switches shall be heavy duty and rated 15 amps minimum. Single- or double-pole switches may be provided, as required.
4. Any exposed terminals or switch solder points shall be covered with a non-flexible shield to prevent accidental contact.
5. All switch functions must be permanently and clearly labeled.
6. All wire routed to the police door-in-door and test switch push button panel shall be adequately protected against damage from repetitive opening and closing of the main door.

H. Controller Telemetry Interface Panel

1. A telemetry interface harness and interface panel shall be supplied with each cabinet assembly when specified in the special provisions.
2. The harness shall be a minimum of 6’ long and shall consist of two twisted shielded pairs, 22 AWG wire with drain wire in an overall jacket, terminated to a 9-pin "D" type connector at one end. The pin out of the 9-pin connector shall be in exact accordance with the NEMA TS2 Standard. The opposite end of the harness shall be terminated on a 10-position EDCO PCB-1B or exact equal lightning protection socket base.
3. All terminal block designations and peripheral board-mounted components shall be labeled as to their number and function and shall correspond to the cabinet wiring diagrams.
4. The following signals shall be accessible from the telemetry interface panel:
   a. Local controller command lines 1 & 2.
   b. Local controller read back lines 1 & 2.
   c. Master controller command lines 1 & 2.
   d. Master controller read back lines 1 & 2.
   e. Earth grounds.
5. A socket mounted communication line transient protection device shall be supplied with the telemetry interface panel. The device shall be an EDCO model PC642C-008D or exact approved equivalent. The transient protection device shall be wired in series with the telemetry communication circuit.
6. Communication line impedance shall be matched to the transmitter output impedance to minimize noise on the communication lines. The panel shall allow connection of a 620-ohm resistor across the command and read back lines, where necessary.

I. Auxiliary Devices

1. Load Switches
   a. Load switches shall be solid state and shall conform to the requirements of Section 6.2 of the NEMA TS2 Standard.
   b. Signal load switches shall have a minimum rating of 10 amps at 120 VAC for an incandescent lamp load.

c. The load switches will be I/O type. The front of the load switch shall be provided with six indicators to show the input signal from the controller to the load switch and the output signal to the field.
d. Load switches shall be dedicated per phase. The use of load switches for other partial phases is not acceptable.
e. The full complement of load switches shall be supplied with each cabinet to allow maximum phase utilization for which the cabinet is designed.

2. Flashers
   a. The flasher shall be solid state and shall conform to the requirements of Section 6.3 of the NEMA TS2 Standard.
   b. Flashing of field circuits for the purpose of intersection flash shall be accomplished by a separate flasher.
   c. The flasher shall be rated at 15 amps, double pole with a nominal flash rate of 60 FPM.

3. Flash Transfer Relays
   a. All flash transfer relays shall meet the requirements of Section 6.4 of the NEMA TS2 Standard.
   b. The coil of the flash transfer relay must be de-energized for flash operation.
   c. The full complement of relays shall be supplied with each cabinet to allow maximum phase utilization for which the cabinet is designed.

4. Malfunction Management Units
   a. Each cabinet assembly shall be supplied with one MMU as defined by the requirements of Section 4 of the NEMA TS2 Standard.
   b. MMUs shall be a Type 16. The MMU shall be an Econolite Control Products, Inc. Model MMU-16E or EDI Model MMU-16LE.

5. Bus Interface Units
   a. All BIUs shall meet the requirements of Section 8 of the NEMA TS2 Standard.
   b. The full complement of BIUs shall be supplied with each cabinet to allow maximum phase and function use for which the cabinet is designed.
   c. Each BIU shall include power on, transmit, and valid data indicators. All indicators shall be LEDs.

6. Cabinet Power Supply
   a. The cabinet power supply shall meet the requirements of Section 5.3.5 of the NEMA TS2 Standard.
   b. The cabinet power supply shall provide LED indicators for the line frequency, 12 VDC, 12 VAC, and 24 VDC outputs.
   c. The cabinet power supply shall provide (on the front panel) jack plugs for access to the +24 VDC for test purposes.

d. One cabinet power supply shall be supplied with each cabinet assembly and shall be wired directly to the Power Bus Assembly.

J. Testing and Warranty

1. Testing

a. Each controller and cabinet assembly shall be tested as a complete entity under signal load for a minimum of 48 hours.
b. Each assembly shall be delivered with a signed document detailing the cabinet final tests performed.
c. The controller manufacturer or authorized local distributor shall assemble and test the cabinet to ensure proper component integration and operation.

2. Warranty

a. The controller and MMU shall be warranted by the manufacturer against mechanical and electrical defects for a minimum period of 2 years from date of shipment. The manufacturer's warranty shall be supplied in writing with each cabinet and controller. Second party extended warranties are not acceptable.
b. The cabinet assembly and all other components shall be warranted for a period of one year from date of shipment.
c. The manufacturer or supplier shall correct any defects at no cost to the owner.

K. Uninterruptable Power Supply (UPS) Specifications

1. General

a. All UPS units shall be rated for use at traffic signals under an external-type environment (pony cabinet) and must meet the following minimum requirements.
b. The UPS unit shall be paid for under the lump sum pay item “UPS Cabinet and Accessories” and shall include all labor, equipment and materials necessary to install the item complete-in-place, including all accessories internal to the cabinet.

2. Power Input / Output

a. The UPS unit shall use 120 VAC, 60 Hz, single-phase source input and provide for input surge suppression.
b. The output shall be a single-phase pure AC sine-wave regulated at 120 VAC (+ 3%), 60 Hz.
c. The UPS unit shall be capable of operating in the voltage range of 85 VAC to 135 VAC without using the batteries.
d. The UPS unit shall be of a double-conversion/true on-line design that addresses clock drift. As a double conversion/true on-line design, the UPS unit shall be in an always-on condition continuously monitoring the input and shall provide continuous frequency and voltage regulation at the output. Upon loss of utility power, the UPS shall transfer to battery mode in zero (0) ms. No transfer time shall be experienced when transitioning to full UPS operation.

e. The UPS unit shall be installed in series with the utility power such that the UPS powers the entire traffic signal cabinet and all associated equipment.

3. Run Time

a. At a peak load requirement of 700 watts, the UPS unit shall provide full signal operation for a minimum of 2 hours with additional minimum flash time of 3 hours.
b. The UPS unit shall provide for user-definable full run-time settings to define full run time before the UPS transitions to flash operation and shall provide for user-definable battery-level flash settings by which the user can change battery-level flash settings.
c. The UPS unit shall remain in or automatically transition to flash operation when utility power fails and the UPS battery levels are below, or fall below, the user-defined battery-level flash settings.
d. The UPS unit shall restore the signal to full operation any time utility power is restored or power is supplied via the generator receptacle.
e. The UPS unit shall include a low battery cutout to prevent critical discharge of and damage to the UPS batteries. Battery recharge of 95 percent shall occur within 8 hours.

4. Indications, Alarms, Faults

a. The UPS unit shall provide a means by which the user can accurately check the battery charge level and UPS load level.
b. The UPS unit shall provide indications that display the current condition of the UPS, including the presence or absence of a critical UPS fault and the presence or absence of utility power.
c. The UPS system shall provide an automatic bypass by which the UPS unit is bypassed and runs off utility power if a critical internal UPS fault occurs.
d. The UPS system shall provide a single dry-contact relay output and alarm trigger with user-definable trigger options to notify the owner of critical events and/or failures, including:

- UPS critical fault
- Loss of utility power input
- Low battery condition

5. Switches, Ports, Receptacles, Controls

a. A bypass switch shall be provided by which the user can manually bypass the UPS and power the signal via utility power. This feature is to be used in the case of UPS failure and/or the need for UPS maintenance or repair procedures.
b. A generator receptacle that is accessible via the exterior of the UPS cabinet shall be provided . The UPS unit shall provide automatic sensing of generator power. The UPS shall be configured such that the UPS provides regulated 120 VAC, 60 Hz, single-phase output power to run the signal in full operation and recharges the UPS batteries while under generator power. The UPS unit shall automatically sense when generator power is applied

and when generator power fails. When generator power is applied, the UPS unit shall be configured such that it automatically reverts to generator power. When generator power fails (generator power falls outside acceptable signal tolerances), the UPS unit shall be configured such that it automatically reverts back to either utility power or UPS battery power, respectively, based on the availability at the time. The UPS shall be configured to run the signal in full operation under generator power regardless of the UPS's battery charge level.

c. An Ethernet switch and/or other networking device shall be provided on the UPS unit to allow options and solutions for networked remote monitoring and management of the UPS.

6. Hardware, Software, Cabling

a. UPS units shall include all components, hardware, cabling, installation manuals, and software required for complete installation, operation, programming, monitoring, and maintenance of the UPS system.

b. All required software and cabling for local UPS management shall also be provided.

7. Pony-Cabinet Specifications

a. All UPS equipment, including the UPS, batteries, all related equipment, and cabling, shall be housed within a single cabinet other than the standard traffic signal cabinet. The pony cabinet shall be directly mounted on either exterior sidewall of the traffic signal cabinet and shall rest on the traffic signal cabinet base for added support.

b. The pony cabinet shall be powder-coat painted to match with existing City cabinet specification.

c. The pony cabinet shall be sized to attach to either exterior sidewall of the traffic signal NEMA "P" cabinet without extending beyond the sidewall of the signal cabinet. The pony-cabinet door shall be parallel with the signal-cabinet sidewall.

d. Pony-cabinet shop drawings shall be submitted for approval.

8. Warranty

a. All UPS equipment shall be warranted for a period of 2 years by the supplier and include shipping and handling fees that may apply to all warranted services and/or repairs.

b. The pony-cabinet assembly and all other components shall be warranted for a period of 1 year from date of shipment.

c. The manufacturer or supplier shall correct any defects at no cost to the owner.

8. Radio Interconnect Communications

A. Unless specified on the plans, interconnect to master system shall be by use of remote radio system.

B. Radio shall be Entra Net 900, remote radio Microwave Data Systems (MDS).

C. All units shall include Yagi Antenna 10db gain, 902-960 MHZ with appropriate mounting hardware, and poliphaser surge/lightning suppresser model No. IS-50NX-C2.

9. Miscellaneous Signal Hardware

A. Aluminum pedestal mounts (Type III) shall be either of two types, as called for in the plans and specifications.

1. Center Mount, plain with two side ports, or
2. Offset Mount, serrated with one side port

B. Covers for water valve pull boxes shall have the word "Traffic" cast into them to avoid confusion with a water department pull box.

C. All "Band-it" material, including buckles, shall be ½" stainless steel.

D. Mast arm brackets shall be Astro brackets or City approved equivalent and shall be installed 90° to the roadway.

6.7 TRAFFIC SIGNAGE AND PAVEMENT MARKINGS

6.7.1 General

The installation of all traffic control devices shall conform to the latest edition of the *MUTCD* and CDOT's *Standard Specifications for Road and Bridge Construction*.

6.7.2 Traffic Control Devices on Public Property

Permanently fixed traffic signals will generally be installed by the City but may be partially funded by the Developer. For more information, refer to **Part II, Section 3.3.6**. Additions of or alterations to signage and striping within the Public ROW will generally be the responsibility of the Developer at the time of development construction. Prior to installation of these Public Improvements, CDs must be approved by the City and applicable permits obtained (see **Part I, Section 2.2**).

6.7.3 Traffic Control Devices on Private Property

The property owner shall install and maintain all traffic control devices on private property; i.e., pavement markings, regulatory signs, fire lane signs, and handicapped parking signs.

A signage and striping plan specifying the various types and combinations of traffic control devices shall be submitted to the City for approval, per **Part I, Section 2.2** of this Manual.

6.7.4 Pavement Markings

All permanent pavement markings installed within the Public ROW shall be thermoplastic as per CDOT Specification 627, with the exception of crosswalk markings, which shall be preformed pavement marking tape, 3M, or approved equal. Temporary pavement markings necessary to facilitate construction (i.e., detours) may be installed using paint but must be maintained by the Contractor until permanent markings are installed.

All pavement markings shall meet the requirements of the latest edition of the *MUTCD*. The City Traffic Engineer must approve all pavement marking materials.

6.8 TRAFFIC SIGNAL POLES, PEDESTALS, AND MAST ARMS

Traffic signal poles, pedestals, and mast arms shall be of the general configuration shown on standard drawings.

6.8.1 CONTROLLER CABINET GENERAL

A. This specification sets forth the minimum requirements for a TS2 Type 1 traffic control modular cabinet assembly. The cabinet assembly shall meet, as a minimum, all applicable sections of the NEMA Standard Publication No. TS2-1998. Where differences occur, this specification shall govern.

B. A controller shall consist of a complete electrical mechanism to control the operation of traffic control signals, including the timing mechanism and all necessary auxiliary equipment. Controllers shall be Econolite ASC/3. All equipment furnished shall be the manufacturers' current production model, complete with all standard accessories, tested and delivered by domestic manufacturer who is regularly engaged in the construction of such equipment. Each cabinet shall be furnished with full eight phase capability (loop amps, load switch, etc.) regardless of specific intersection design with the exception of mid-block and fire signals.

C. All electrical conduits running to the control cabinet shall enter from the bottom only, except as noted on the plans. No holes shall be drilled in any part of the cabinet other than the bottom unless otherwise called for on the plans.

D. All controller cabinets and control equipment shall be factory wired, ready for operation. The Contractor shall test cabinet and controller in his shop prior to installation. Field work will be limited to placing cabinets and equipment and connecting field wiring to field terminal strips. All cabinet wiring shall be neat and firm.

E. At the Contractor's request, the City may allow an additional external lock for the controller cabinet to maintain security of the controller cabinet. In this event, the City shall be provided a key to the additional lock for their use.

F. Controller cabinets shall be furnished with all mounting hardware.

G. Power protection devices shall include the main AC+ power circuit breaker, radio interference suppressors, and lightning and surge protectors. These devices shall be in addition to any protective devices furnished with the controller and auxiliary equipment housed within the cabinet and shall be provided on the load side of the circuit breakers. All devices shall be mounted to the interior wall or the cabinet in the approved manner.

H. All controller cabinets shall be equipped for and wired for two Opticom card rack mounted GTT Model 752 phase selectors. The selector cards, field wiring, and detectors shall not be supplied, unless called for in the plans.

I. Opticom detectors and phase selectors, when called out in the plans, shall be measured and paid for under the pay items "GTT Opticom Detectors (Model 711, 721, 722), each; or GTT Opticom 2 Channel Discriminator Card (Model 752), each;" and shall include all labor, equipment, and materials necessary to install the item complete-in-place.

J. The controller cabinet shall be paid for under the lump sum pay item "Cabinet and Accessories" and shall include all labor, equipment, and materials necessary to install the item complete-in-place, including all accessories internal to the cabinet.

6.8.2 Cabinet Design and Construction

A. The cabinet shall be constructed from Type 5052-H32 aluminum with a minimum thickness of 0.125".

B. The cabinet shall be designed and manufactured with materials that will allow rigid mounting, whether intended for pole, base, or pedestal mounting. The cabinet must not flex on its mount.

C. A rain channel shall be incorporated into the design of the main door opening to prevent liquids from entering the enclosure. The cabinet door opening must be a minimum of 80 percent of the front surface of the cabinet. A stiffener plate shall be welded across the inside of the main door to prevent flexing.

D. The top of the cabinet shall incorporate a 1-inch slope toward the rear to prevent rain accumulation.

E. Unless otherwise specified, the cabinet surface shall be brushed aluminum and powder painted. The exterior of the cabinet shall be degreased and prepped with yellow or green chromate, then primed with TCI wheel silver #9811-0110 polyester powder paint prior to the finishing coat. The final coat shall be TGIC smooth powder, TCI anti-graffiti powder-coat paint with color matching Sherwin Williams #6114 (Bagel) applied with a minimum thickness of 2.4 mm. Sufficient care shall be taken in handling to ensure that scratches are minimized. All surfaces shall be free from weld flash. Welds shall be smooth, neatly formed, and free from cracks, blowholes, and other irregularities. All sharp edges shall be ground smooth.

F. All seams shall be sealed with RTV sealant or equivalent material on the interior of the cabinet.

G. All cabinets shall be supplied with a minimum of one removable shelf manufactured from 5052-H32 aluminum to hold the controller and MMUs. A second shelf also manufactured from 5052-H32 aluminum shall be installed toward the top of the cabinet. This removable shelf shall hold the detector card rack with ample room for the power supply. Shelves shall be a minimum of 10" deep.

H. The shelves shall have horizontal slots at the rear and vertical slots at the front of the turned down side flange. The shelves shall be installed by first inserting the rear edge of the shelf on the cabinet rear sidewall mounting studs and then lowering the shelf on the front sidewall mounting studs.

The shelves shall be held in place by a nylon tie-wrap inserted through holes on the front edge of the shelf and around the front sidewall mounting studs.

I. The front edge of the shelves shall have holes punched every 6” to accommodate tie-wrapping of cables/harnesses.

J. A minimum of one set of vertical "C" channels shall be mounted on each interior wall of the cabinet for the purpose of mounting the cabinet components. The channels shall accommodate spring mounted nuts or studs. All mounting rails shall extend to within 7” of the top and bottom of the cabinet. Sidewall rail spacing shall be 7.88” center-to-center. Rear wall rail spacing shall be 18.50” center-to-center.

K. The main door and police door-in-door shall close against a weatherproof and dust-proof, closed-cell neoprene gasket seal. The gasket material for the main door shall be a minimum of 0.250” thick by 1.00” wide. The gasket material for the police door shall be a minimum of 0.250” thick by 0.50” wide. The gaskets shall be permanently bonded to the cabinet.

L. The lower section of the cabinet shall be equipped with a louvered air entrance. The air inlet shall be large enough to allow sufficient air flow per the rated fan capacity. Louvers must satisfy the NEMA rod entry test for 3R ventilated enclosures. A non-corrosive, vermin- and insect-proof, removable air filter shall be secured to the air entrance. The filter shall fit snugly against the cabinet door wall.

M. The roof of the cabinet shall incorporate an exhaust plenum with a vent screen. Perforations in the vent screen shall not exceed 0.125” in diameter.

N. The main door on a “P44” cabinet shall be equipped with a three-point latching mechanism.

O. The handle on the main door of a “P44” cabinet shall use a shank of 5/8” minimum diameter. The handle on the main door of a “Pole Mount” cabinet shall use a shank of 7/16” minimum diameter. The handle shall include a hasp for the attachment of an optional padlock. The cabinet door handle shall rotate counter-clockwise to open. The handle shall not extend beyond the perimeter of the main door at any time. The lock assembly shall be positioned so that the handle shall not cause any interference with the key when opening the cabinet door.

P. The main door hinge shall be a one-piece, continuous piano hinge with a stainless steel pin running the entire length of the door. The hinge shall be attached in such a manner that no rivets or bolts are exposed.

Q. The main door of a “P44” cabinet shall include a mechanism capable of holding the door open at approximately 90°, 125°, and 150° under windy conditions. Manual placement of the mechanism shall not be required by field personnel. The main door of a “Pole Mount” cabinet shall include a mechanism capable of holding the door open at approximately 90° and 150° under windy conditions.

R. The main door shall be equipped with a Corbin tumbler lock number 1548-1 or exact equivalent. Minimum of two keys shall be supplied.

S. The police door-in-door shall be provided with a treasury type lock Corbin No. R357SGS or equivalent and a minimum of two keys.

T. All base mounted cabinets require anchor bolts to properly secure the cabinet to its base. The cabinet flange for securing the anchor bolts shall not protrude outward from the bottom of the cabinet. For "P44" cabinets, four anchor bolts shall be required for proper installation.

U. Each cabinet shall be of sufficient size to accommodate all equipment. At a minimum, cabinet sizes are as follows:

- 32" H x 20" W x 14" D-(Pole Mount cabinet)
- 52" H x 44" W x 24" D-(P44 cabinet)

6.8.3 Terminals and Facilities/Main Panel Design and Construction

A. The main panel shall be constructed and installed to minimize flexing when plug-in components are installed.

B. All 4-, 8-, 12-, and 16-position main panels are provided with a mounting mechanism that allows easy access to all wiring on the rear of the panel without removing any cabinet shelves. Lowering or completely removing the main panel can be accomplished without using hand tools.

C. The terminals and facilities shall be available as a minimum in the following configurations:

1. Configuration #1 – Four load switch sockets, two flash transfer relay sockets, one flasher socket, one BIU socket (expandable to two) with one BIU for each socket, one 8-channel detector rack with one BIU, and one Type-16 MMU.
2. Configuration #2 – Eight load switch sockets, four flash transfer relay sockets, one flasher socket, one BIU sockets (expandable to two) with one BIU for each socket, one 8-channel detector rack with one BIU, and one Type-16 MMU.
3. Configuration #3 – Twelve load switch sockets, six flash transfer relay sockets, one flasher socket, two BIU sockets with one BIU for each socket, one 16-channel detector rack with one BIU, and one Type-16 MMU.
4. Configuration #4 – Sixteen load switch sockets, six flash transfer relay sockets, one flasher socket, two BIU sockets with one BIU for each socket, one 16-channel detector rack with one BIU, and one Type-16 MMU.

D. All load switch and flash transfer relay socket reference designators shall be silk-screen labeled on the front and rear of the main panel to match drawing designations. Socket pins shall be marked for reference on the rear of the panel.

E. A bracket shall support all load switches extending at least half the length of the load switch.

F. Rack style mounting shall be provided to accommodate the required BIUs per the configuration listed above. A dual-row, 64-pin female DIN 41612 Type B connector shall be provided for each BIU rack position. Card guides shall be provided for both edges of the BIU. Terminal and facilities BIU mounting shall be an integral part of the main panel. Detector rack BIU mounting shall be an integral part of the detector rack.

G. All BIU rack connectors shall have pre-wired address pins corresponding to the requirements of the TS2 specification. The address pins shall control the BIU mode of operation. BIUs shall be capable of being interchanged with no additional programming.

H. All field output circuits shall be terminated on a non-fused barrier type terminal block with a minimum rating of 10 amps.

I. All field I/O terminals shall be identified by permanent alphanumerical labels. All labels shall use standard nomenclature per the NEMA TS2 specification.

J. It shall be possible to flash either the yellow or the red indication on any vehicle movement and to change from one color indication to the other by using a screwdriver.

K. The main panel shall contain at least one flasher socket (silk-screen labeled) capable of operating a 15-amp, 2-pole NEMA solid-state flasher. The flasher shall be supported by a bracket extending at least half its length.

L. One RC network shall be wired in parallel with each group of three flash-transfer relays and any other relay coils.

M. All logic-level, NEMA-controller and MMU input and output terminations on the main panel shall be permanently labeled. Cabinet prints shall identify the function of each terminal position.

N. Connecting cables shall be sleeved in a braided nylon mesh or poly-jacketed. The use of exposed tie-wraps or interwoven cables is unacceptable.

O. All Terminals and Facilities configurations shall be provided with sufficient RS-485 Port 1 communication cables to allow the intended operation of that cabinet. Each communication cable connector shall be a 15-pin metal shell D subminiature type. The cable shall be a shielded cable suitable for RS-485 communications.

P. All main panels shall be pre-wired for a Type-16 MMU.

Q. All wiring shall be neat in appearance. All cabinet wiring shall be continuous from its point of origin to its termination point. Butt type connections/splices are not acceptable.

R. All connecting cables and wire runs shall be secured by mechanical clamps. Stick-on type clamps are not acceptable.

S. The grounding system in the cabinet shall be divided into three separate circuits: AC Neutral, Earth Ground, and Logic Ground. These ground circuits shall be connected at a single point as outlined in the NEMA TS2 Standard.

T. The main panel shall incorporate a relay to remove +24 VDC from the common side of the load switches when the intersection is placed into mechanical flash. The relay shall have a momentary push button to apply power to the load switch inputs for ease of troubleshooting.

U. All pedestrian push button inputs from the field to the controller shall be opto-isolated through the BIU and operate at 12 VAC.

V. All wire (size 16 AWG or smaller) at solder joints shall be hooked or looped around the eyelet or terminal block post before soldering to ensure circuit integrity. Lap joint soldering is not acceptable.

6.8.4 Power Panel Design and Construction

A. The power panel shall consist of a separate module securely fastened to the right side wall of the cabinet. The power panel shall be wired to provide the necessary filtered power to the load switches, flasher(s), and power bus assembly. The power panel shall have a removable plastic front cover of such design to allow a technician to access the main and auxiliary breakers without removing the front cover.

B. The power panel shall house the following components:

1. A minimum of a 40-amp main breaker for 12- or 16-position cabinets or a minimum of a 30-amp breaker for 4- or 8-position cabinets. This breaker shall supply power to the controller, MMU, signals, cabinet power supply, and auxiliary panels. Breakers shall be at minimum, a thermal magnetic type, UL listed for HACR service, with a minimum of 10,000 amp interrupting capacity.
2. A minimum of a 15-amp auxiliary breaker. This breaker shall supply power to the fan, light, and GFI utility outlet.
3. An EDCO model SHP-300-10 or exact approved equivalent surge arrester.
4. A 50 amp, 125 VAC radio interference line filter.
5. A normally-open 60-amp mercury contactor Durakool model BBC-7032 or exact equivalent.
6. A minimum of 8-position neutral bus bar capable of connecting three #12 wires per position.
7. A minimum of 6-position ground bus bar capable of connecting three #12 wires per position.
8. A NEMA type 5-15R GFI utility outlet.

6.8.5 Auxiliary Cabinet Equipment

A. The cabinet shall be provided with a thermostatically controlled (adjustable between 80° and 150° F) ventilation fan in the top of the cabinet plenum. The fan plate shall be removable with the use of simple hand tools for serviceability. A minimum of one exhaust fan shall be provided. The fan shall be a ball bearing type fan capable of drawing a minimum of 100 cubic feet of air per minute.

B. At minimum, a 40-watt incandescent refrigerator lamp and socket mounted on an aluminum bracket shall be mounted in the cabinet to sufficiently illuminate the field terminals. The lamp shall be wired to a door-activated switch mounted near the top of the door.

C. Alternately, a 25-watt incandescent lamp mounted on a 14-inch flexible arm shall be included. The flexible arm shall be permanently mounted to the middle of the cabinet door. The lamp shall be wired to a door-activated switch mounted near the top of the door.

D. Alternately, a fluorescent lighting fixture shall be mounted on the inside top of the cabinet near the front edge. The fixture shall be rated to accommodate at a minimum a F15T8 lamp operated from a normal power factor UL or ETL listed ballast. The lamp shall be wired to a door-activated switch mounted near the top of the door.

E. A resealable print pouch shall be mounted to the cabinet door. The pouch shall be of sufficient size to accommodate one complete set of cabinet prints.

F. A minimum of two sets of complete and accurate cabinet drawings shall be supplied with each cabinet.

G. A minimum of one set of manuals for the controller, MMU, and vehicle detector amplifiers shall be supplied with each cabinet.

6.8.6 Vehicle Detection

A. A minimum of one vehicle detector amplifier rack shall be provided in each cabinet. Detector racks shall be available in two configurations:

1. Configuration #1 – Shall support up to 8 channels of loop detection (either four 2-channel detectors or two 4-channel detectors), two 2-channel preemption devices, and one BIU.
2. Configuration #2 – Shall support up to 16 channels of loop detection (either eight 2-channel detectors or four 4-channel detectors), two 2-channel preemption devices, and one BIU.

B. Each cabinet shall contain detector interface panels for the purpose of connecting field loops and vehicle detector amplifiers.

C. One 8-position interface panel shall be provided for an 8-channel rack cabinet, and one 16-position interface panel shall be provided for a 16-channel rack cabinet. The interface panel shall be secured to a mounting plate and attached to the left sidewall of the cabinet.

D. Each interface panel shall allow the connection of 8 or 16 independent field loops. A ground bus terminal shall be provided between each loop pair terminal to provide a termination for the loop lead-in cable ground wire.

E. Each interface panel shall provide a terminal block to terminate the field wires for up to two 2-channel preemption devices.

F. Lightning protection device mounting holes shall be provided to accommodate an EDCO SRA-16C, or EDCO SRA-6, or EDCO LCA-6, or a varistor lightning protection device.

G. All termination points shall be identified by a unique number and silk screened on the panel.

H. Each detector rack shall accommodate rack mountable preemption devices such as EMTRAC or Opticom.

6.8.7 Cabinet Test Switches and Police Panel

A. A test switch panel shall be mounted on the inside of the main door. The test switch panel shall provide as a minimum the following:

1. AUTO/FLASH SWITCH. When in the flash position, power shall be maintained to the controller and the intersection shall be placed in flash. The controller shall not be stop timed when in flash. If required by the plans and specifications, an optional RC network shall be provided to give the controller an external start pulse when the switch is returned to the auto position. This will force the controller to initiate the startup sequence when exiting flash.
2. STOP TIME SWITCH. When applied, the controller shall be stop timed in the current interval.
3. CONTROL EQUIPMENT POWER ON/OFF. This switch shall control the controller, MMU, and cabinet power supply AC power.
4. COORD/FREE SWITCH. Cabinet wiring shall include provisions for COORD/FREE switch.
5. Momentary test push buttons for all vehicle and pedestrian inputs to the controller.

B. The police door switch panel shall contain the following:

1. SIGNALS ON/OFF SWITCH. In the OFF position, power shall be removed from signal heads in the intersection. The controller shall continue to operate. When in the OFF position, the MMU shall not conflict or require reset.
2. AUTO/FLASH SWITCH. In the flash position, power shall not be removed from the controller and stop time shall be applied. If required by the plans and specifications, an optional RC network shall be provided to give the controller an external start pulse when the switch is returned to the auto position. This will force the controller to initiate the startup sequence when exiting flash.
3. AUTO/MANUAL SWITCH. Cabinet wiring shall include an AUTO/MANUAL switch and a momentary push button or hand cord.

C. All toggle type switches shall be heavy duty and rated 15 amps minimum. Single- or double-pole switches may be provided, as required.

D. Any exposed terminals or switch solder points shall be covered with a non-flexible shield to prevent accidental contact.

E. All switch functions must be permanently and clearly labeled.

F. All wire routed to the police door-in-door and test switch push button panel shall be adequately protected against damage from repetitive opening and closing of the main door.

6.8.8 Controller Telemetry Interface Panel

A. A telemetry interface harness and interface panel shall be supplied with each cabinet assembly when specified in the special provisions.

B. The harness shall be a minimum of 6' long and shall consist of two twisted shielded pairs, 22 AWG wire with drain wire in an overall jacket, terminated to a 9-pin "D" type connector at one end. The pin out of the 9-pin connector shall be in exact accordance with the NEMA TS2 Standard. The opposite end of the harness shall be terminated on a 10-position EDCO PCB-1B or exact equal lightning protection socket base.

C. All terminal block designations and peripheral board-mounted components shall be labeled as to their number and function and shall correspond to the cabinet wiring diagrams.

D. The following signals shall be accessible from the telemetry interface panel:

1. Local controller command lines 1 & 2.
2. Local controller read back lines 1 & 2.
3. Master controller command lines 1 & 2.
4. Master controller read back lines 1 & 2.
5. Earth grounds.

E. A socket mounted communication line transient protection device shall be supplied with the telemetry interface panel. The device shall be an EDCO model PC642C-008D or exact approved equivalent. The transient protection device shall be wired in series with the telemetry communication circuit.

F. Communication line impedance shall be matched to the transmitter output impedance to minimize noise on the communication lines. The panel shall allow connection of a 620 ohm resistor across the command and read back lines, where necessary.

6.8.9 Auxiliary Devices

A. Load Switches

1. Load switches shall be solid state and shall conform to the requirements of Section 6.2 of the NEMA TS2 Standard.
2. Signal load switches shall have a minimum rating of 10 amps at 120 VAC for an incandescent lamp load.
3. The load switches will be I/O type. The front of the load switch shall be provided with six indicators to show the input signal from the controller to the load switch and the output signal to the field.
4. Load switches shall be dedicated per phase. The use of load switches for other partial phases is not acceptable.

5. The full complement of load switches shall be supplied with each cabinet to allow maximum phase utilization for which the cabinet is designed.

B. Flashers

1. The flasher shall be solid state and shall conform to the requirements of Section 6.3 of the NEMA TS2 Standard.
2. Flashing of field circuits for the purpose of intersection flash shall be accomplished by a separate flasher.
3. The flasher shall be rated at 15 amps, double pole with a nominal flash rate of 60 FPM.

C. Flash Transfer Relays

1. All flash transfer relays shall meet the requirements of Section 6.4 of the NEMA TS2 Standard.
2. The coil of the flash transfer relay must be de-energized for flash operation.
3. The full complement of relays shall be supplied with each cabinet to allow maximum phase utilization for which the cabinet is designed.

D. Malfunction Management Units

1. Each cabinet assembly shall be supplied with one MMU as defined by the requirements of Section 4 of the NEMA TS2 Standard.
2. MMUs shall be a Type 16. The MMU shall be an Econolite Control Products, Inc. Model MMU-16E or EDI Model MMU-16LE.

E. Bus Interface Units

1. All BIUs shall meet the requirements of Section 8 of the NEMA TS2 Standard.
2. The full complement of BIUs shall be supplied with each cabinet to allow for maximum phase and function use for which the cabinet is designed.
3. Each BIU shall include power on, transmit, and valid data indicators. All indicators shall be LEDs.

F. Cabinet Power Supply

1. The cabinet power supply shall meet the requirements of Section 5.3.5 of the NEMA TS2 Standard.
2. The cabinet power supply shall provide LED indicators for the line frequency, 12 VDC, 12 VAC, and 24 VDC outputs.
3. The cabinet power supply shall provide (on the front panel) jack plugs for access to the +24 VDC for test purposes.
4. One cabinet power supply shall be supplied with each cabinet assembly and wired directly to the Power Bus Assembly.

6.8.10 Testing and Warranty

A. Testing

1. Each controller and cabinet assembly shall be tested as a complete entity under signal load for a minimum of 48 hours.
2. Each assembly shall be delivered with a signed document detailing the cabinet final tests performed.
3. The controller manufacturer or authorized local distributor shall assemble and test the cabinet to ensure proper component integration and operation.

B. Warranty

1. The manufacturer shall warrant the controller and MMU against mechanical and electrical defects for a minimum period of 2 years from date of shipment. The manufacturer's warranty shall be supplied in writing with each cabinet and controller. Second party extended warranties are not acceptable.
2. The cabinet assembly and all other components shall be warranted for a period of 1 year from date of shipment.
3. The manufacture or supplier shall correct any defects at no cost to the owner.

6.8.11 UPS Specifications

A. All UPS units shall be rated for use at traffic signals under an external-type environment (pony cabinet) and must meet the following minimum requirements.

B. The UPS unit shall be paid for under the lump sum pay item “UPS Cabinet and Accessories” and shall include all labor, equipment, and materials necessary to install the item complete-in-place, including all accessories internal to the cabinet.

6.8.12 Power Input/Output

A. The UPS unit shall use 120 VAC, 60 Hz, single-phase source input and provide for input surge suppression.

B. The output shall be a single-phase pure AC sine-wave regulated at 120 VAC (+ 3%), 60 Hz.

C. The UPS unit shall be capable of operating in the voltage range of 85 VAC to 135 VAC without using the batteries.

D. The UPS unit shall be of a double-conversion/true on-line design that addresses clock drift. As a double conversion/true on-line design, the UPS unit shall be in an always-on condition continuously monitoring the input and shall provide continuous frequency and voltage regulation at the output. Upon loss of utility power, the UPS shall transfer to battery mode in zero (0) ms. No transfer time shall be experienced when transitioning to full UPS operation.

E. The UPS unit shall be installed in series with the utility power such that the UPS powers the entire traffic signal cabinet and all associated equipment.

6.8.13 Run Time

A. At a peak load requirement of 700 watts, the UPS unit shall provide full signal operation for a minimum of 2 hours with additional minimum flash time of 3 hours.

B. The UPS unit shall provide for user-definable full run-time settings to define full run time before the UPS transitions to flash operation and shall provide user-definable battery-level flash settings by which the user can change battery-level flash settings.

C. The UPS unit shall remain in or automatically transition to flash operation when utility power fails and the UPS battery levels are below, or fall below, the user-defined battery-level flash settings.

D. The UPS unit shall restore the signal to full operation any time utility power is restored or power is supplied via the generator receptacle.

E. The UPS unit shall include a low battery cutout to prevent critical discharge of and damage to the UPS batteries. Battery recharge of 95 percent shall occur within 8 hours.

6.8.14 Indications, Alarms, Faults

A. The UPS unit shall provide the means by which the user can accurately check the battery charge level and UPS load level.

B. The UPS unit shall provide indications that display the current condition of the UPS, including the presence or absence of a critical UPS fault and the presence or absence of utility power.

C. The UPS system shall provide an automatic bypass by which the UPS unit is bypassed and runs off utility power if a critical internal UPS fault occurs.

D. The UPS system shall provide a single dry-contact relay output and alarm trigger with user-definable trigger options to notify the owner of critical events and/or failures, including:

1. UPS critical fault
2. Loss of utility power input
3. Low battery condition

6.8.15 Switches, Ports, Receptacles, Controls

A. A bypass switch shall be provided by which the user can manually bypass the UPS and power the signal via utility power. This feature is to be used in the case of UPS failure and/or the need for UPS maintenance or repair procedures.

B. A generator receptacle that is accessible via the exterior of the UPS cabinet shall be provided. The UPS unit shall provide automatic sensing of generator power. The UPS shall be configured such that the UPS provides regulated 120 VAC, 60 Hz, single-phase output power to run the signal in full operation and recharges the UPS batteries while under generator power. The UPS unit shall automatically sense when generator power is applied and when generator power fails. When generator power is applied, the UPS unit shall be configured such that it automatically reverts to

generator power. When generator power fails (generator power falls outside acceptable signal tolerances), the UPS unit shall be configured such that it automatically reverts back to either utility power or UPS battery power, respectively, based on the availability at the time. The UPS shall be configured to run the signal in full operation under generator power regardless of the UPS's battery charge level.

C. An Ethernet switch and/or other networking device shall be provided on the UPS unit to allow options and solutions for networked remote monitoring and management of the UPS.

6.8.16 Hardware, Software, Cabling

A. UPS units shall include all components, hardware, cabling, installation manuals, and software required for complete installation, operation, programming, monitoring, and maintenance of the UPS system. All required software and cabling for local UPS management shall also be provided.

B. Pony-Cabinet Specifications

C. All UPS equipment, including the UPS, batteries, all related equipment, and cabling, shall be housed within a single cabinet other than the standard traffic signal cabinet. The pony cabinet shall be directly mounted on either exterior sidewall of the traffic signal cabinet and shall rest on the traffic signal cabinet base for added support.

D. The pony cabinet shall be powder-coat painted to match with existing City cabinet specification.

E. The pony cabinet shall be sized to attach to either exterior sidewall of the traffic signal NEMA "P" cabinet without extending beyond the sidewall of the signal cabinet. The pony-cabinet door shall be parallel with the signal-cabinet sidewall.

F. Pony-cabinet shop drawings shall be submitted for approval.

6.8.17 Warranty

All UPS equipment shall be warranted for a period of 2 years by the supplier and include shipping and handling fees that may apply to all warranted services and/or repairs.

The pony-cabinet assembly and all other components shall be warranted for a period of 1 year from date of shipment.

The manufacturer or supplier shall correct any defects at no cost to the owner.

6.8.18 Miscellaneous Hardware

A. Aluminum pedestal mounts (Type III) shall be either to two types, as called for in the plans and specifications: center mount with two side ports and plain or offset mount serrated with one side port.

B. Covers for water valve pull boxes shall have the word "Traffic" cast into them to avoid confusion with a water department pull box.

C. All band-it material, including buckles, shall be ½" stainless steel.

D. Mast arm brackets shall be Astro brackets or City approved equivalent and shall be installed 90° to the roadway.

6.8.19 Paint – Signal Poles

A. New Structures

1. All new signal poles, mast arms, and luminaire arms shall be received from the manufacturer with a powder-coat-over-galvanized finish and securely wrapped in ultraviolet-inhibiting plastic and foam to prevent abrasions during shipping. All poles, mast arms, and luminaire arms shall be hot-dip galvanized and the surfaces prime-coated with a zinc rich epoxy powder and then top-coated with a polyester powder. Surface preparation shall be per the manufacturer's specifications to achieve galvanized and powder-coat treatment, which shall be approved by the City Traffic Engineer as part of the approval of shop drawings prior to fabrication.
2. Zinc-rich epoxy powder prime coat shall be applied to all exterior surfaces to a minimum dry film thickness of 3.0 mils. The bottom 8' of the pole shaft shall have a minimum dry film thickness of 6.0 mils. The polyester powder top coat shall be applied to all primed exterior surfaces to a minimum dry film thickness of 3.0 mils. Powder coat shall be electrostatically applied. The top-coat finish shall be high-gloss black.
3. Any surface areas damaged during handling or installation shall be repaired immediately with a spot coat of epoxy primer and a high-gloss black polyurethane paint. The paint manufacturer's application instructions shall be followed.

B. Existing Structures

1. All designated previously installed signal poles and mast arms shall be field painted. All exterior surfaces shall be cleaned and examined for damaged paint, and any such damage shall be given a spot coat of primer and the entire exterior surface repainted. Previously painted surfaces, whether finish or prime coats, shall be scuff sanded to yield 500 psi of adhesion with particular attention paid to the lower 8' of the pole. Inspection of the poles prior to application of the finish coat is required.
2. A finish coat of Sherwin Williams DTM (Direct to Metal) Acrylic Gloss or approved equal shall be applied over the primer or previously painted surfaces. Two coatings shall be applied leaving approximately 6 mils of dry film. The color shall be a high-gloss black.
3. The painting shall be done in a neat and workmanlike manner and may be applied either by hand brushing or spraying. The Engineer reserves the right to require the use of brushes for the application of paint should the work done by the paint spraying machine prove unsatisfactory or objectionable.

6.8.20 Instructions and Wiring Diagrams

All equipment shall be provided with three sets of complete installation instructions, including a complete chart of field connections and a manual for the controller, containing service instructions, wiring diagrams, trouble-shooting procedures, etc. The service manual shall reference each and every component used and provide its value, ratings and manufacturer part number.

6.8.21 Radio Interconnect Communications

Unless specified on the plans, interconnect to master system shall be by use of remote radio system. Radio shall be Entra Net 900, remote radio Microwave Data Systems (MDS). All units shall include Yagi Antenna 10db gain, 902-960 MHZ with appropriate mounting hardware and poliphaser surge/lightning suppresser model No. IS-50NX-C2.

SECTION 7.0 INSPECTION AND TESTING

7.1 QUALITY CONTROL/QUALITY ASSURANCE

The Contractor will be responsible for daily quality control operations during the construction of the public and private improvements. The Contractor shall be fully responsible for the acts and omissions of their subcontractors and of any persons either directly or indirectly employed by the Contractor or their subcontractors.

The City may also perform additional tasks for quality assurance including, but not limited to, parallel testing, document review, field technician interviews, certificate reviews, calibration reports, and periodic sample testing.

7.2 CONSTRUCTION INSPECTION

All work sites, materials, and equipment used in the construction of projects within the City shall be subject to inspection and testing in accordance with this Manual and the City ROW regulations. The City shall have access to the work site at all times, and the Contractor shall provide proper facilities for access and inspection. The City shall have the right to reject materials and workmanship that are defective or that do not meet the City requirements. Rejected workmanship shall be corrected to the City's satisfaction. Rejected materials shall be removed from the premises and properly disposed of at the Contractor's expense.

If any work is covered contrary to the instructions or without approval or consent from the City, it shall be uncovered for examination by the City if and when requested. Uncovered work areas shall be properly restored at the Contractor's expense.

Unacceptable work shall be repaired and approved by the City at the expense of the developer/permittee. An oversight on behalf of the City and its representatives shall in no way constitute an acceptance of any part of work later determined to be unacceptable.

Inspections shall be scheduled as per the requirements of the City ROW regulations and as determined at the Pre-Construction Meeting.

7.3 CONSTRUCTION TESTING

Construction testing and submittals shall be performed in accordance with the Public Works Department *Right-of-Way Regulations Manual*.

SECTION 8.0 ACCEPTANCE PROCEDURES AND REQUIREMENTS

8.1 ACCEPTANCE AND WARRANTIES

Acceptance procedures and required warranties shall be in accordance with the Public Works Department *Right-of-Way Regulations Manual*.

8.2 RECORD DRAWINGS

A complete set of as-built drawings of the public improvements shall be submitted to and approved by the City prior to Probationary Acceptance (Land Use Cases) or Substantial Completion (City projects).

8.2.1 REQUIREMENTS FOR CONSTRUCTION AS-BUILT PLANS

The Developer/Contractor will be required to first submit a certified set of the 22" x 34" as-built plans in PDF format for review. The applicable sheets from the approved construction plans shall be used in preparing the as-built plans. The original design information shall be presented as shown on the approved construction plans and struck through with a single line if the as-built information is different from that of the original design. The as-built information shall be provided directly next to the original design information, and "AB" shall be provided next to the as-built information to denote it as such.

At a minimum, record drawings shall indicate the horizontal layout of all underground storm sewer infrastructure (including inlets, manholes, outlet structures, etc.), roadway plan and profiles, signage and striping plans, roadway intersection grading details, as-built details of special or unusual installations, and changes from the proposed site plan (when applicable). The as-built plans shall clearly depict all revisions to the construction plans, including field changes,.

The City may request additional clarification and/or information.

Once reviewed, the Developer/Contractor will be instructed to submit the final as-builts. The final submittal of as-builts shall be made on 22" x 34" PDF sheets. Each sheet of the as-builts shall be signed and sealed by the Professional Land Surveyor registered by the State of Colorado who is responsible for the land survey and signed and sealed by the Professional Engineer registered by the State of Colorado who is responsible for the preparation of the record drawings.

The following statements shall be provided on the cover sheet of the as-built construction drawings and the subsequent as-built drawings:

- The responsible land surveyor, registered as a Professional Land Surveyor in the State of Colorado, shall sign and seal the following statement and all subsequent as-built plan sheets:

  "I, _____, a registered Land Surveyor in the State of Colorado, do hereby certify that this as-built survey of _____ represents an actual survey made on the ground in accordance with the laws of the State of Colorado under my direct supervision on _____ in the State of Colorado."

- The design engineer, registered as a Professional Engineer in the State of Colorado, responsible for the preparation and any revisions to the approved construction drawings shall sign and seal the following statement and all subsequent as-built plan sheets:

  "I, _____, a registered Professional Engineer in the State of Colorado, do hereby certify that the site improvements were inspected and to the best of my knowledge, belief, and opinion, the site improvements were constructed in accordance with the design intent of the approved construction drawings."

APPENDICES

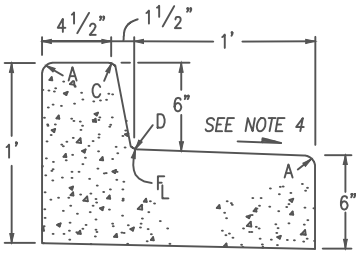

MEDIAN CURB AND GUTTER
(6" BARRIER – 1' GUTTER)

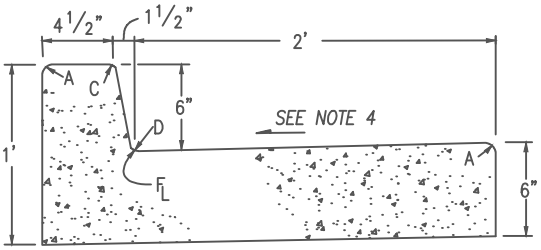

VERTICAL CURB AND GUTTER
(6" BARRIER – 2' GUTTER)

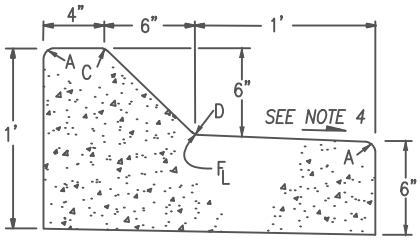

CURB AND GUTTER TYPE 2
(6" MOUNTABLE – 1' GUTTER)

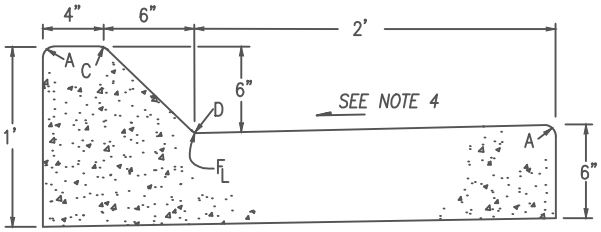

CURB AND GUTTER TYPE 2
(6" MOUNTABLE – 2' GUTTER)

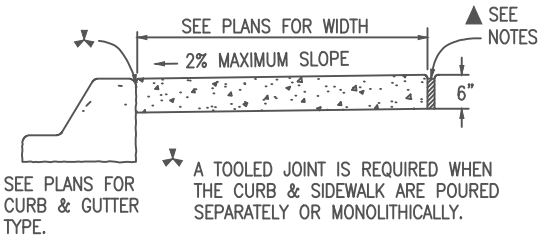

CONCRETE SIDEWALK

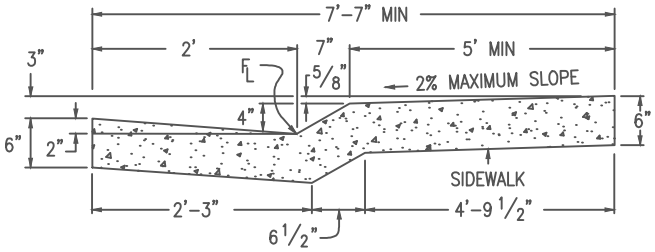

CURB AND GUTTER TYPE 2
(4" MOUNTABLE WITH SIDEWALK)

CURB AND GUTTER NOTES

1. NO. 4 REBAR SHALL BE USED IN ALL CURB RETURNS WITH 25' OR LARGER RADII. THE REBAR SHALL BE USED FROM BEGINNING TO END OF THE CURB RETURN.
2. AT THE LOW POINT(S) OF EACH MEDIAN A DRAIN SYSTEM SHALL BE DESIGNED TO CONVEY STORM AND IRRIGATION FLOWS.
3. ALL CONCRETE SHALL BE POURED ON 6" ABC MINIMUM.
4. GUTTER CROSS-SLOPE SHALL BE $\frac{1}{2}$" PER FOOT WHEN DRAINING AWAY FROM CURB AND 1" PER FOOT WHEN DRAINING TOWARD CURB.
5. TRANSVERSE CONTRACTION JOINTS SHALL BE PLACED EVERY 10' ALONG CURB AND GUTTER AND CURB HEAD.
6. EXPANSION JOINTS SHALL BE PLACED AT 90' INTERVALS ALONG CURB AND GUTTER AND CURB HEAD.

▲ EXPANSION JOINTS SHALL BE INSTALLED WHEN ABUTTING EXISTING CONCRETE OR FIXED STRUCTURE. EXPANSIONS JOINT MATERIAL SHALL BE $\frac{1}{2}$" THICK AND SHALL EXTEND THE FULL DEPTH OF CONTACT SURFACE.

SIDEWALK NOTES

1. ALL CONCRETE SHALL BE POURED ON 6" ABC MINIMUM.
2. TRANSVERSE CONTRACTION JOINTS SHALL BE PLACED EVERY 5' ALONG SIDEWALK.
3. EXPANSION JOINTS SHALL BE PLACED AT 100' INTERVALS ALONG SIDEWALK.

LEGEND FOR RADII
A = 1/8" TO 1/4"
B = 1"
C = 1 1/2"
D = 1 1/2" TO 2"

APPROVAL:

DIRECTOR OF PUBLIC WORKS

REV #	DATE	DESCRIPTION
#	MM/YY	DESC 1
#	MM/YY	DESC 2
#	MM/YY	DESC 3

CURB, GUTTER, & ATTACHED SIDEWALK

DATE: MM/YY

NOT TO SCALE

Centennial

STANDARD DETAIL NO.

SD-1

ELEVATION VIEW

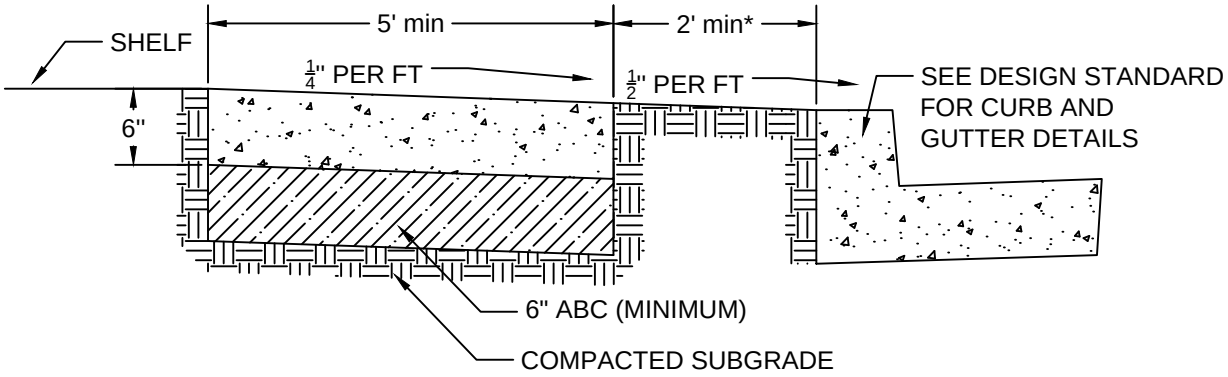

PLAN VIEW

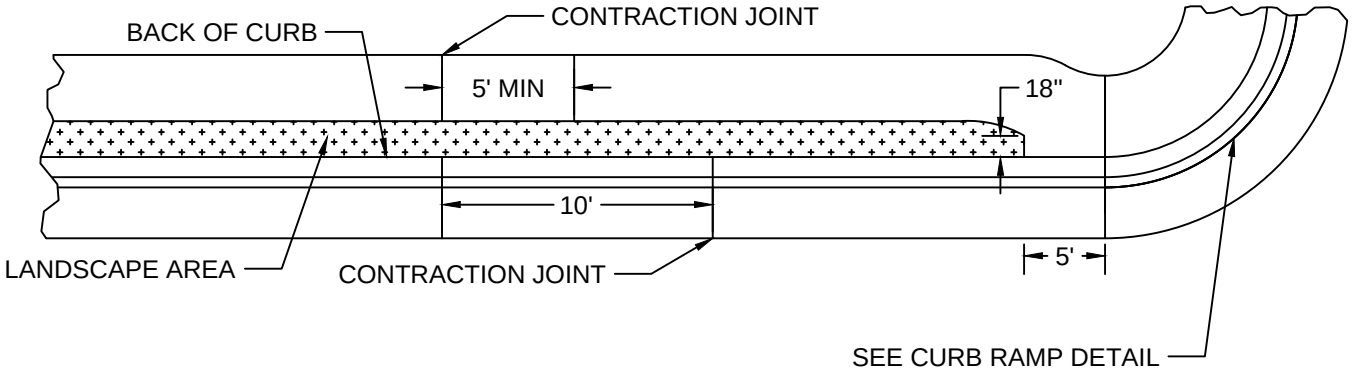

GENERAL NOTES

1. SEE SIDEWALK NOTES FOR MORE INFORMATION.

*REFERENCE DETAILS FOR TYPICAL STREET SECTIONS FOR LANDSCAPE AREA WIDTH REQUIREMENTS.

APPROVAL:

DIRECTOR OF PUBLIC WORKS

REV #	DATE	DESCRIPTION
#	MM/YY	DESC 1
#	MM/YY	DESC 2
	MM/YY	DESC 3

DETACHED SIDEWALK

DATE: MM/YY

NOT TO SCALE

Centennial

STANDARD DETAIL NO.

SD-2

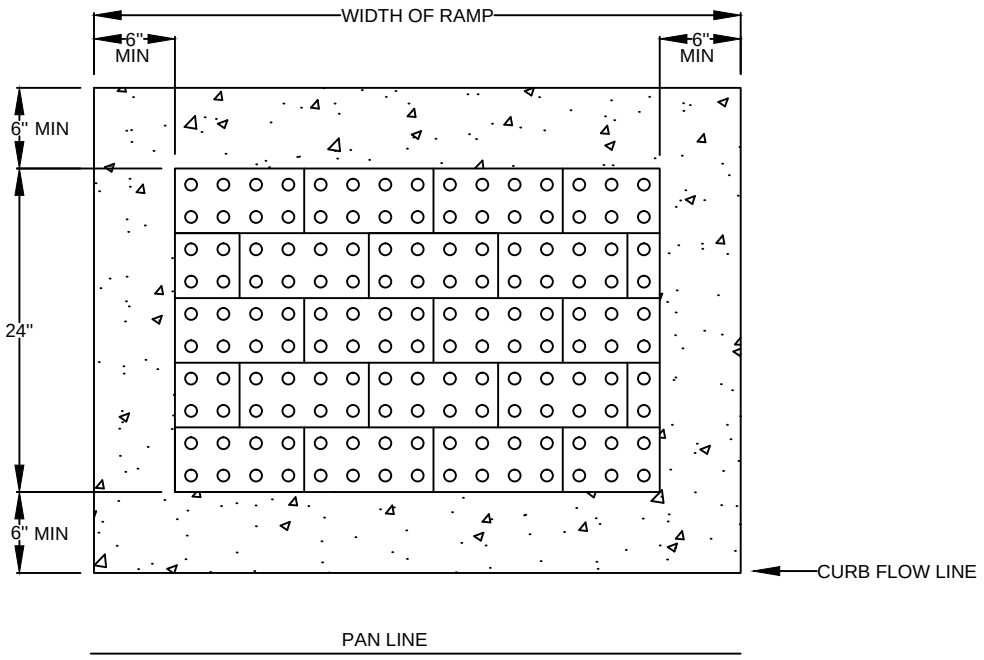

PLAN VIEW

ELEVATION VIEW

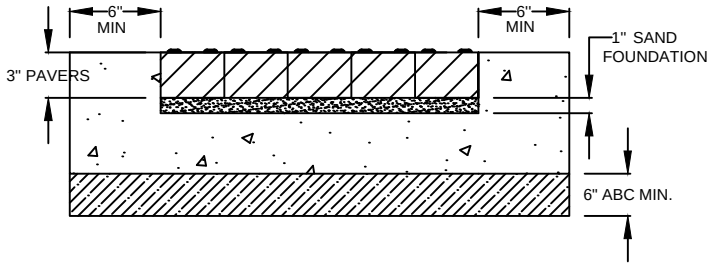

DOME DETAILS

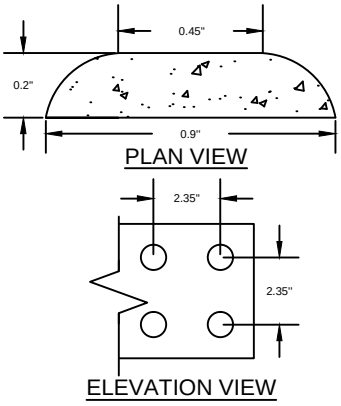

NOTES:

1. DETECTABLE WARNING AREA WITH TRUNCATED DOMES SHALL CONSIST OF PAVERS OR APPROVED EQUAL AND SHALL BE INSTALLED IN THE RECTANGULAR PORTION OF THE RAMP.
2. PAVERS SHALL BE PLACED IN A RUNNING BOND PATTERN. TRUNCATED DOMES SHALL BE PLACED IN A SQUARE GRID, ALIGNED IN THE DIRECTION OF TRAVEL. WHEN CUT PAVERS ARE REQUIRED, THE PAVERS SHALL BE CUT AND INSTALLED IN SUCH A MANNER THAT THE TRUNCATED DOMES WILL NOT SIGNIFICANTLY IMPACT THE OVERALL PATTERN OF THE TRUNCATED DOMES.
3. THE ENTIRE DETECTABLE WARNING SURFACE AREA SHALL MATCH DAVIS COLOR TILE RED OR APPROVED EQUAL.
4. THE DETECTABLE WARNING SURFACE AREAS SHALL START 6 TO 8 INCHES FROM THE FLOW LINE OF THE CURB AND SHALL EXTEND 2 FEET UP THE RAMP AREA.
5. VERTICAL CHANGES IN LEVEL BETWEEN PAVERS OR BETWEEN CONCRETE AND PAVERS SHALL NOT EXCEED $\frac{1}{4}$ INCH.
6. DETECTABLE WARNING PANELS SHALL CONFORM TO CURRENT ADA STANDARDS.

APPROVAL:

DIRECTOR OF PUBLIC WORKS

REV #	DATE	DESCRIPTION
#	MM/YY	DESC 1
#	MM/YY	DESC 2
#	MM/YY	DESC 3

DETECTABLE WARNINGS

DATE: MM/YY

NOT TO SCALE

Centennial

STANDARD DETAIL NO.

SD-3

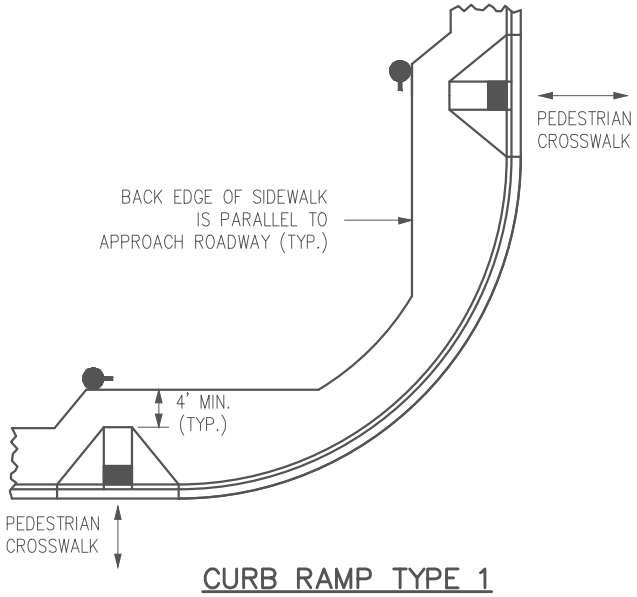

CURB RAMP TYPE 1

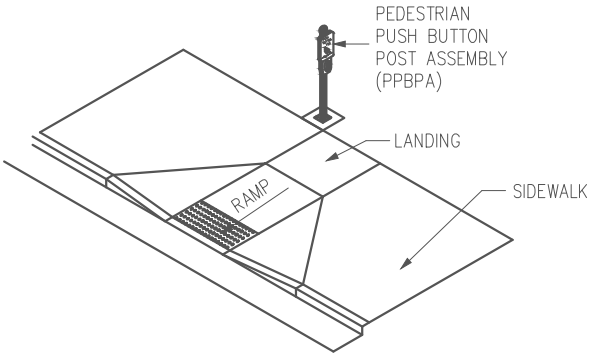

CURB RAMP WITH
PEDESTRIAN PUSH BUTTTON POST

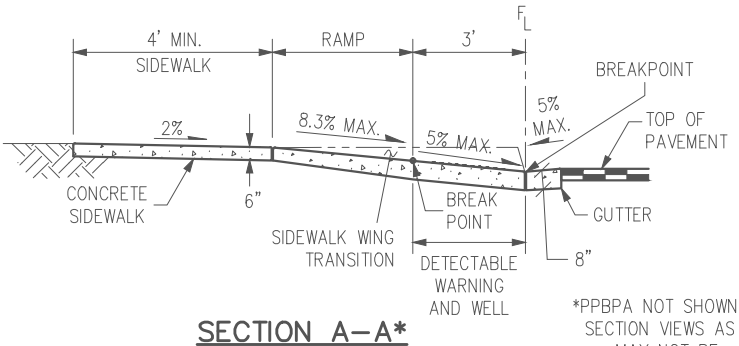

SECTION A–A*

*PPBPA NOT SHOWN IN SECTION VIEWS AS IT MAY NOT BE REQUIRED

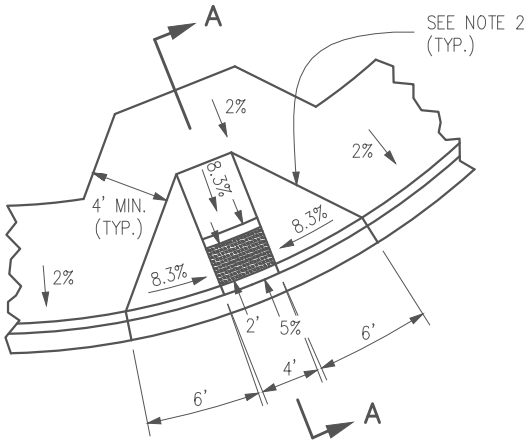

RAMP DETAIL

FOR CURB RAMP
TYPE 1

GENERAL NOTES

1. THE DETECTABLE WARNINGS SHALL BE INSTALLED AT SIDEWALK TO STREET TRANSITIONS PER THE CITY OF CENTENNIAL STANDARD DETAIL. THE DOMES SHALL BE IN A SQUARE GRID PATTERN.
2. RAMP SLOPES SHALL BE 8.3% OR FLATTER. THE DETECTABLE WARNING SLOPES SHALL BE 5% OR FLATTER.
3. MINIMUM SIDEWALK WIDTH IS 5 FT.
4. DO NOT INSTALL DRAINAGE STRUCTURES, TRAFFIC SIGNAL EQUIPMENT, JUNCTION BOXES, AND OTHER OBSTRUCTIONS IN FRONT OF THE RAMP ACCESS AREAS.
5. IF THE PLACEMENT OF A PEDESTRIAN PUSH BUTTON ASSEMBLY ON A TRAFFIC SIGNAL MAST POLE WILL NOT BE WITHIN EASY REACH (10" OR LESS AND UNOBSTRUCTED) OF PEDESTRIANS (IN ACCORDANCE WITH THE AMERICANS WITH DISABILITIES ACT), THEN A SEPERATE PEDESTRIAN PUSH BUTTON POST ASSEMBLY (PPBPA) SHALL BE INSTALLED WITHIN EASY REACH. THE PPBPA SHALL MEET THE PROVISIONS FOUND IN THE MUTCD MANUAL, LATEST EDITION.
6. THE SLOPES MAY BE LOWER THAN WHAT IS SHOWN BUT THEY SHALL NOT EXCEED THESE VALUES.
   THE CURB RAMP (EXCLUDING ANY FLARED SIDES) OR BLENDED TRANSITION SHALL BE CONTAINED WHOLLY WITHIN THE WIDTH OF THE CROSSWALK AND/OR PEDESTRIAN STREET CROSSING THE RAMP SERVES.

● – PEDESTRIAN PUSH BUTTON POST ASSEMBLY (PPBPA).
SEE NOTE 5.
SEE PLANS FOR LOCATIONS.
THE SIGN FACE SHALL BE PARALLEL TO THE CROSSWALK.

APPROVAL:

DIRECTOR OF PUBLIC WORKS

REV #	DATE	DESCRIPTION
#	MM/YY	DESC 1
#	MM/YY	DESC 2
#	MM/YY	DESC 3

CURB RAMPS - TYPE 1

DATE: MM/YY

NOT TO SCALE

Centennial

STANDARD DETAIL NO.

SD-4

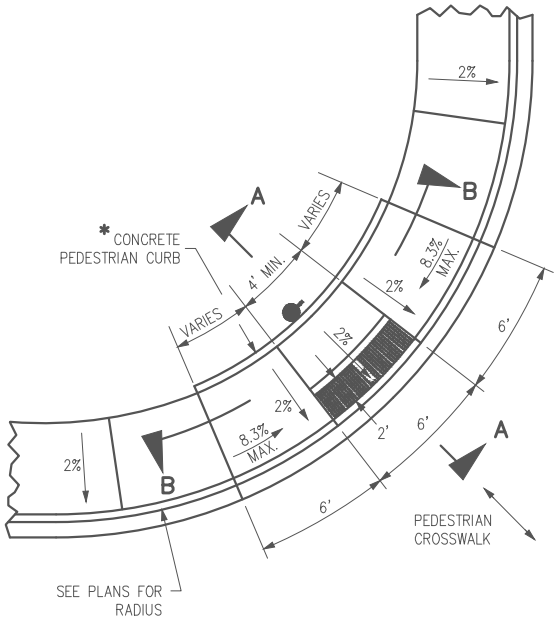

CURB RAMP TYPE 2A

SEE NOTE 3.

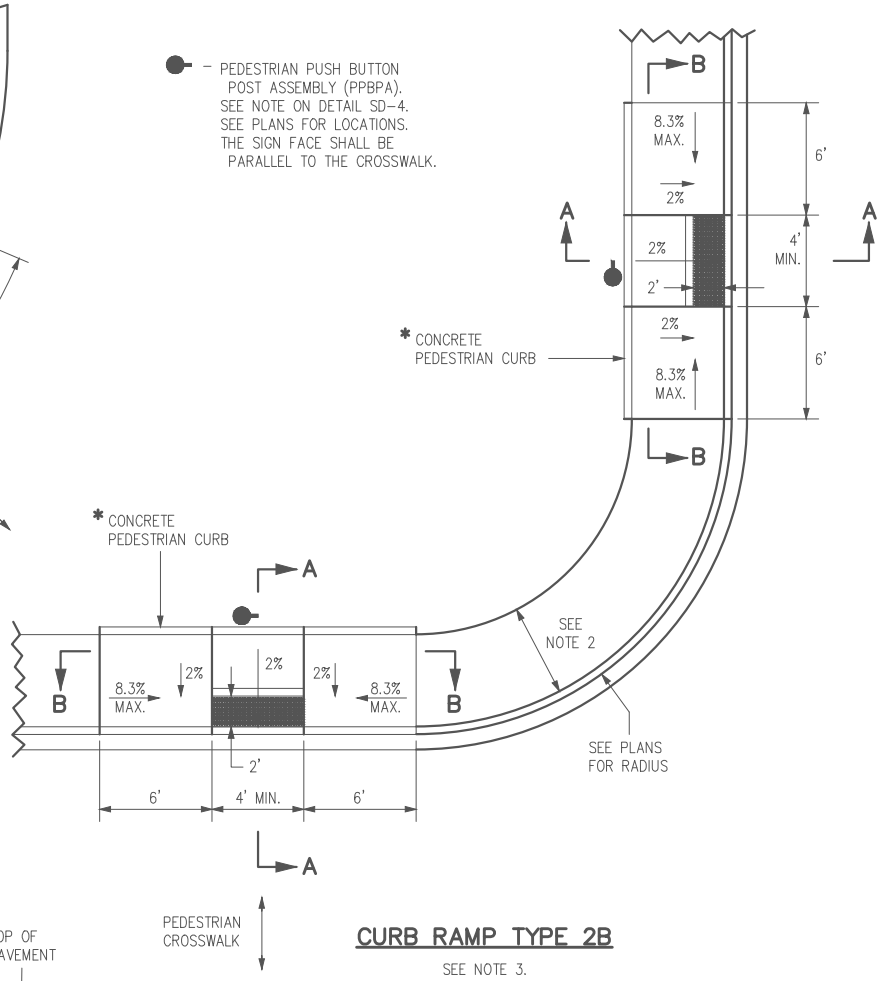

CURB RAMP TYPE 2B

SEE NOTE 3.

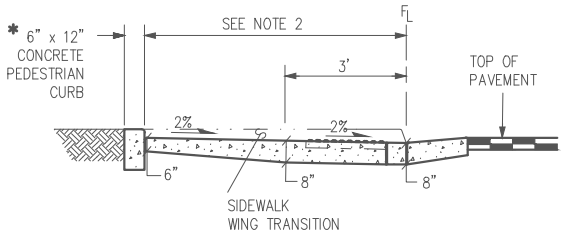

SECTION A–A

(PPBPA NOT SHOWN IN SECTION VIEWS AS IT MAY NOT BE REQUIRED.)

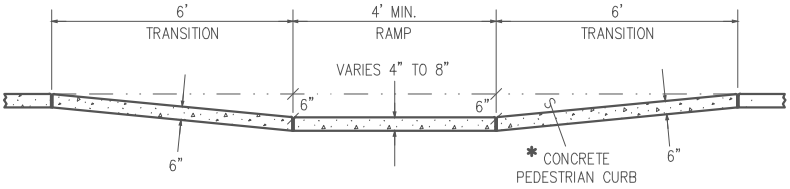

SECTION B–B

NOTES

1. CURB RAMP TYPE 2A MAY BE USED IN MID-BLOCK.
2. SEE PLANS FOR SIDEWALK WIDTH. THE MINIMUM SIDEWALK WIDTH IS 5 FT.
3. CURB RAMP TYPE 2A DIAGONAL (ON THE APEX) IS UNACCEPTABLE IN NEW CONSTRUCTION. TYPICALLY, TWO CURB RAMPS AS IN TYPE 2B, MUST BE PROVIDED AT EACH STREET CORNER.

APPROVAL:

DIRECTOR OF PUBLIC WORKS

REV #	DATE	DESCRIPTION
#	MM/YY	DESC 1
#	MM/YY	DESC 2
#	MM/YY	DESC 3

CURB RAMPS - TYPE 2

DATE: MM/YY

NOT TO SCALE

Centennial

STANDARD DETAIL NO.

SD-5

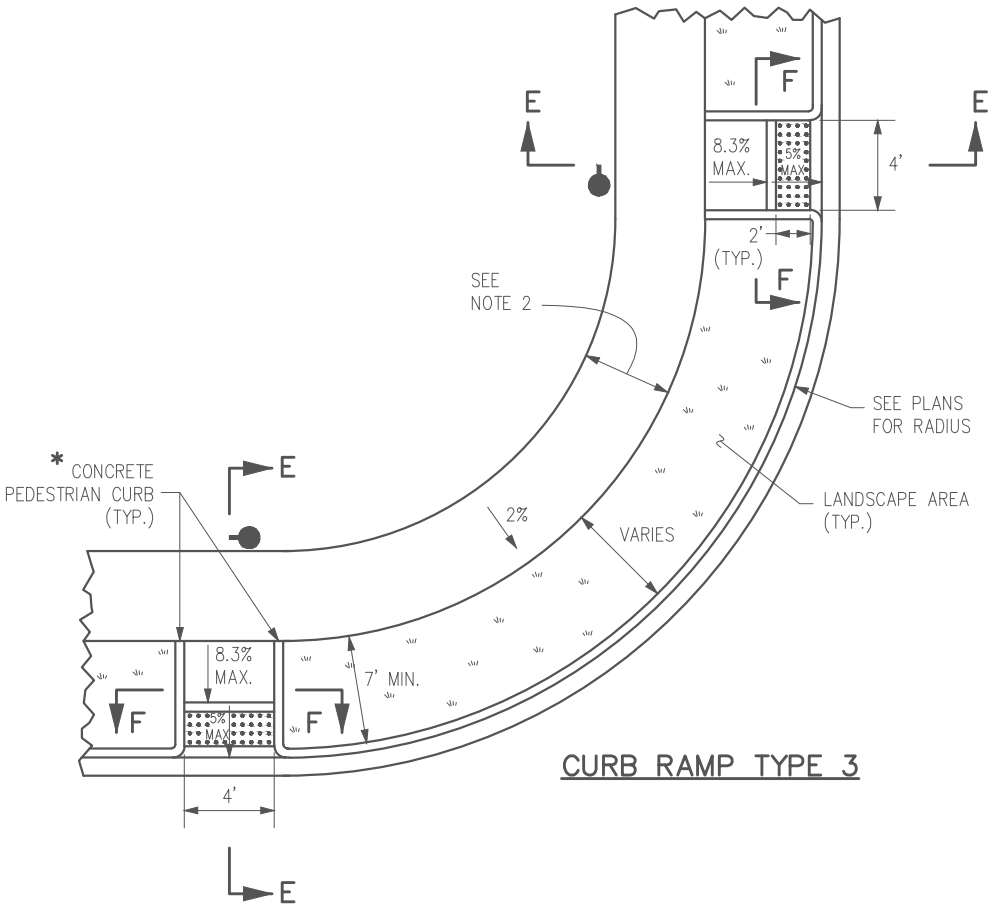

CURB RAMP TYPE 3

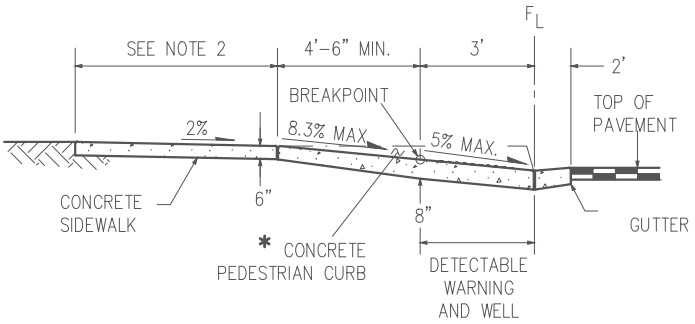

SECTION E-E

(PPBPA NOT SHOWN IN SECTION VIEWS AS IT MAY NOT BE REQUIRED.)

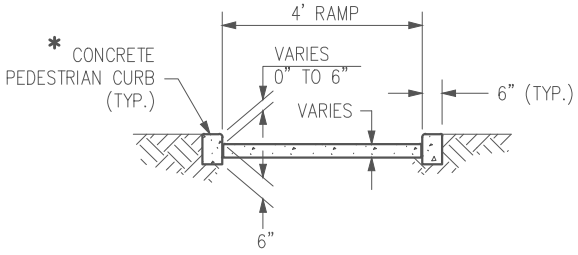

SECTION F-F

NOTES

1. SEE PLANS FOR SIDEWALK WIDTH. THE MINIMUM SIDEWALK WIDTH IS 5 FT.

● – PEDESTRIAN PUSH BUTTON POST ASSEMBLY (PPBPA).
SEE NOTE ON SHEET SD-4.
SEE PLANS FOR LOCATIONS.
THE SIGN FACE SHALL BE PARALLEL TO THE CROSSWALK.

APPROVAL:

DIRECTOR OF PUBLIC WORKS

REV #	DATE	DESCRIPTION
#	MM/YY	DESC 1
#	MM/YY	DESC 2
#	MM/YY	DESC 3

CURB RAMPS - TYPE 3

DATE: MM/YY

NOT TO SCALE

Centennial

STANDARD DETAIL NO.

SD-6

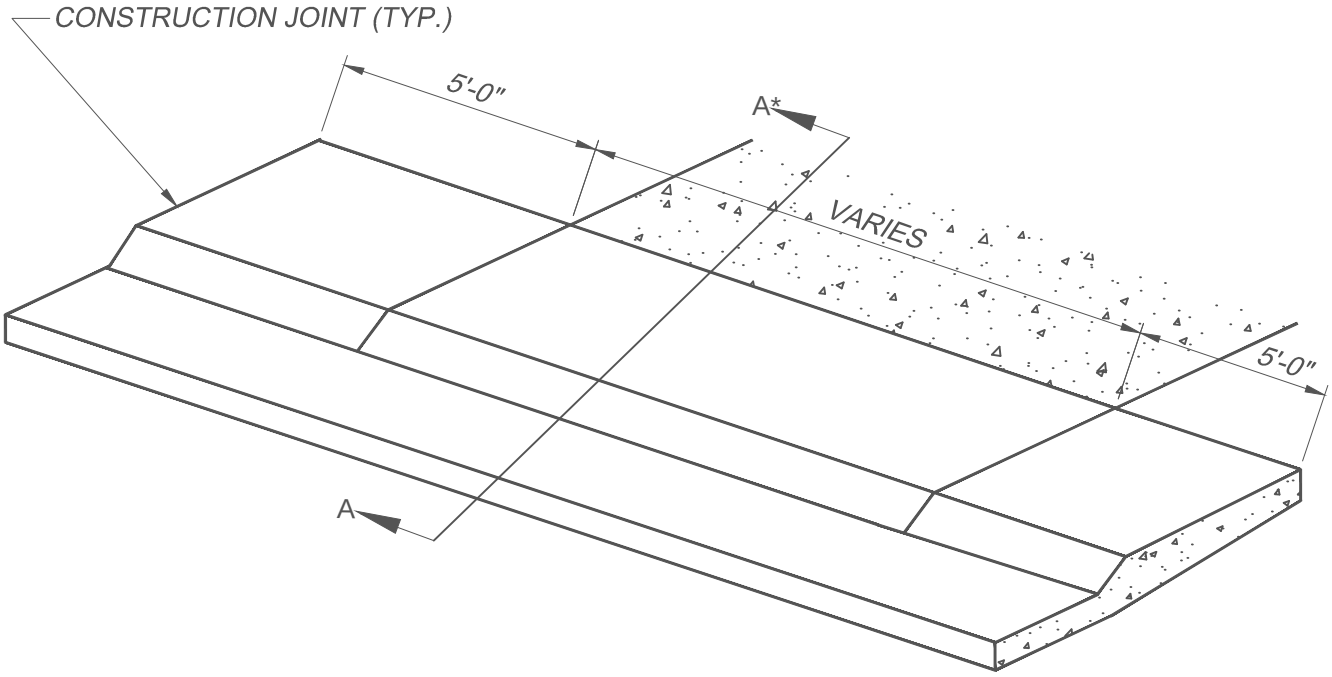

COMBINATION CURB GUTTER & SIDEWALK WITH DRIVEWAY

NOTES

1. CONSTRUCTION JOINTS REQUIRED IN DRIVEWAY AT MAXIMUM 10' SPACING
2. DRIVEWAYS ARE TO BE PLACED MONOLITHIC WITH CURB & GUTTER
3. CONCRETE THICKNESS SHALL BE 6" MINIMUM ON 6" ABC MINIMUM. SEE STANDARD DETAIL FOR ATTACHED SIDEWALK.
4. ALL ACCESSES ON COLLECTOR AND ARTERIAL STREETS OR ANY NON-SINGLE FAMILY USE MUST BE APPROVED BY THE DIRECTOR OF PUBLIC WORKS OR DESIGNEE.
5. WHERE SITE OR OTHER CONDITIONS WARRANT, THE CITY MAY REQUIRE AN ALTERNATE DESIGN.

* SEE SD-1 4" MOUNTABLE WITH SIDEWALK FOR SECTION A-A

APPROVAL:

DIRECTOR OF PUBLIC WORKS

REV #	DATE	DESCRIPTION
#	MM/YY	DESC 1
#	MM/YY	DESC 2
#	MM/YY	DESC 3

RESIDENTIAL DRIVEWAY

DATE: MM/YY

NOT TO SCALE

Centennial

STANDARD DETAIL NO.

SD-7

CURB AND GUTTER TRANSITION

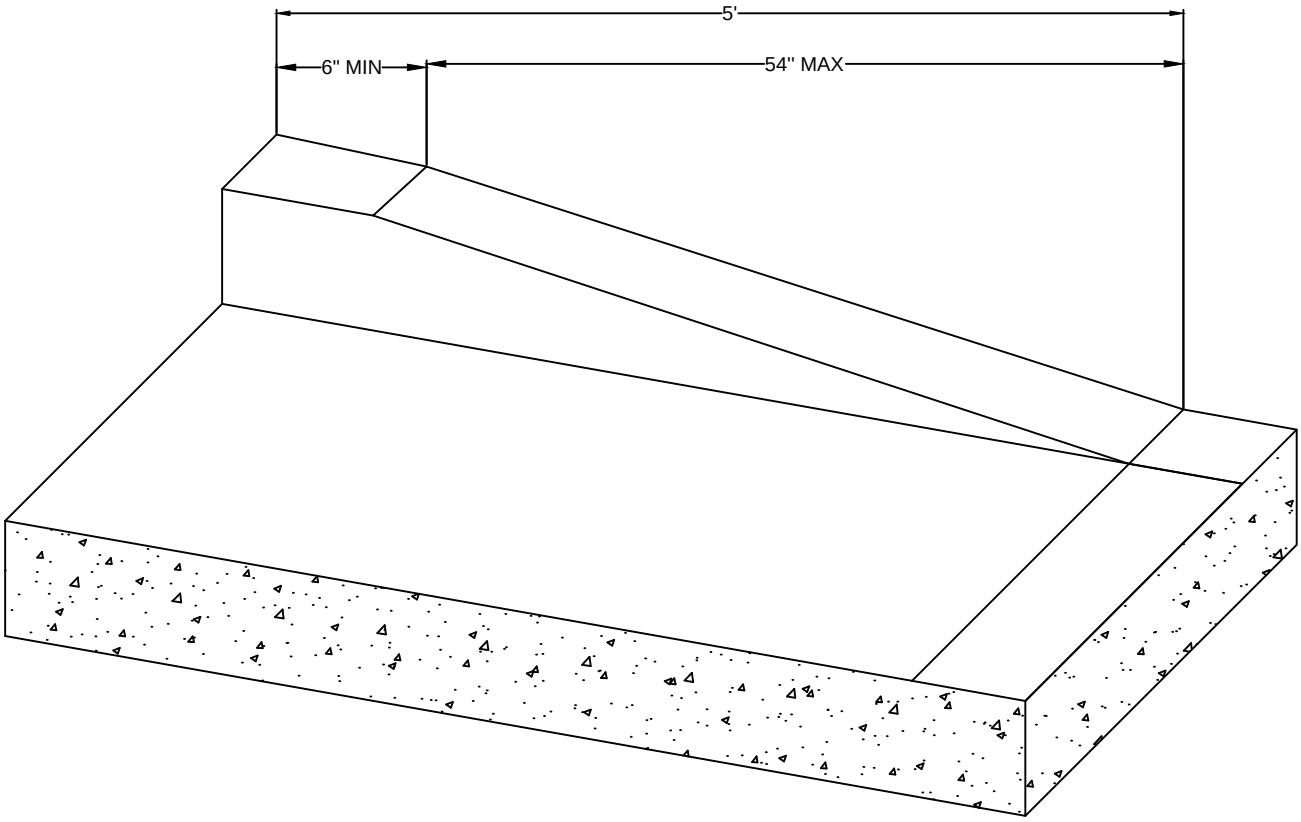

NOTE: SEE NOTES ON SD-1 FOR MORE INFORMATION.

APPROVAL:

DIRECTOR OF PUBLIC WORKS

REV #	DATE	DESCRIPTION
#	MM/YY	DESC 1
#	MM/YY	DESC 2
#	MM/YY	DESC 3

CURB TRANSITION TO FLUSH

DATE: MM/YY

NOT TO SCALE

Centennial

STANDARD DETAIL NO.

SD-8

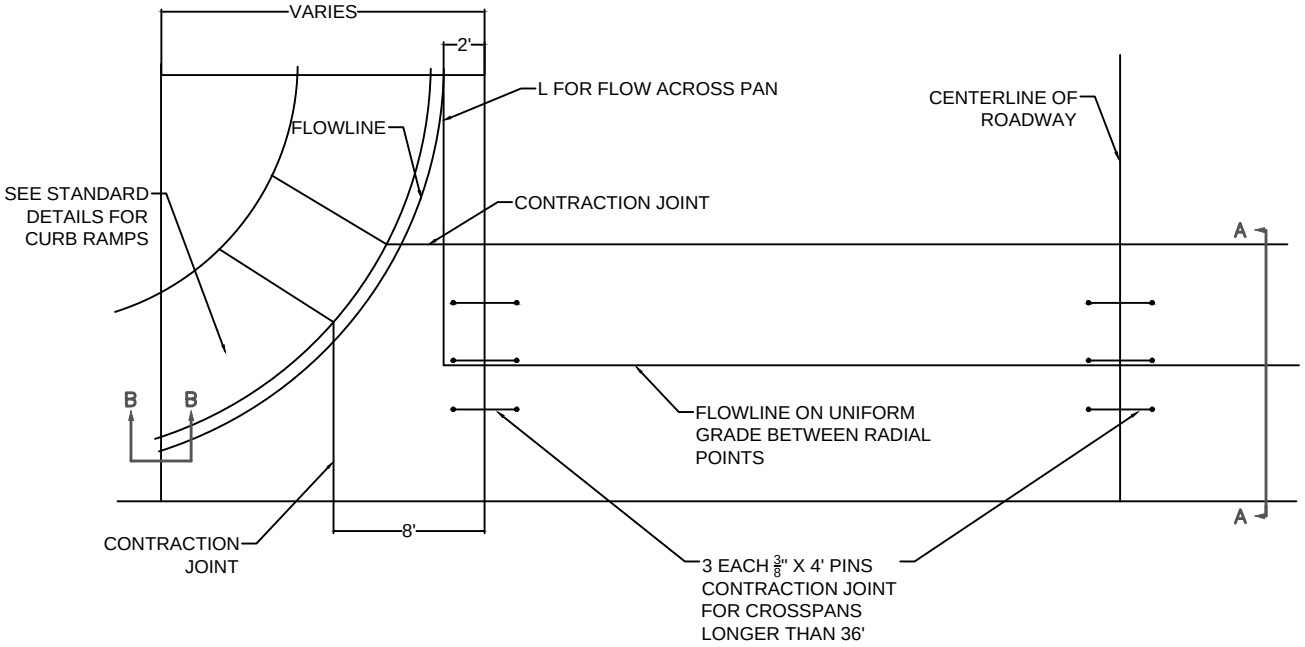

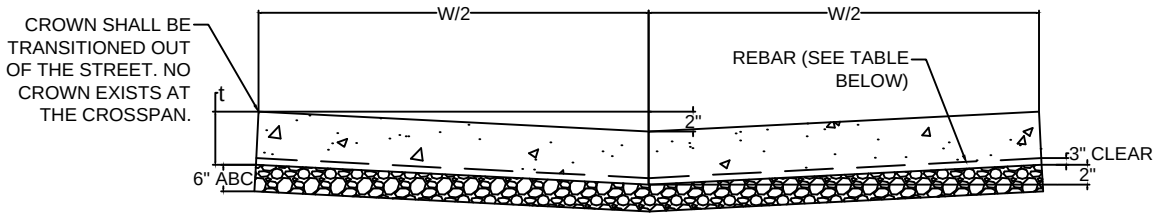

SECTION A-A

PAN LENGTH	REBAR REQUIREMENTS
36'	0.10 SQ. IN. PER FOOT (#4 @ 18")
46'	0.13 SQ. IN. PER FOOT (#4 @ 18")
64'	0.20 SQ. IN. PER FOOT (#4 @ 12")
84'	0.26 SQ. IN. PER FOOT (#4 @ 9")

CROSSPAN INFORMATION	
WIDTH (W)	THICKNESS (t)
96 IN.	10" WITH #4 OR 12" NO REBAR
120 IN.	10" WITH #4 OR 12" NO REBAR

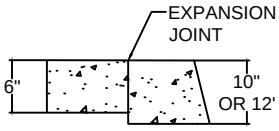

SECTION B-B

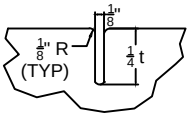

CONTRACTION OR WEAKENED PLANE JOINT

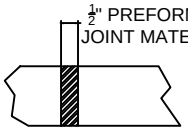

EXPANSION JOINT

NOTES:

1. THE CROSSPAN SHALL BE 12" THICK WITHOUT REINFORCING OR 10" THICK WITH REINFORCING AS DETAILED ABOVE.
2. CONCRETE SHALL BE POURED ON 6" AGGREGATE BASE COURSE (ABC) MINIMUM.
3. JOINT FILLER SHALL BE PLACED WITH THE TOP EDGE 1/4" BELOW THE CONCRETE SURFACE AND SHALL BE HELD IN PLACE BY STEEL PINS DRIVEN INTO THE SUBGRADE AT SPACING ADEQUATE TO PREVENT WARPING OF THE FILLER DURING FLOATING. UPON COMPLETION OF FLOATING, THE STEEL PINS SHALL BE REMOVED AND WHEN FINISHING OPERATIONS HAVE BEEN COMPLETED, THE JOINT SHALL BE EDGED WITH AN EDGING TOOL HAVING A RADIUS OF 1/8".
4. CONTRACTION JOINTS WILL BE PLACED AT 10' MAXIMUM SPACING THROUGHOUT THE CROSSPAN.

APPROVAL:

DIRECTOR OF PUBLIC WORKS

REV #	DATE	DESCRIPTION
#	MM/YY	DESC 1
#	MM/YY	DESC 2
#	MM/YY	DESC 3

CROSSPAN

DATE: MM/YY

NOT TO SCALE

Centennial

STANDARD DETAIL NO.

SD-9

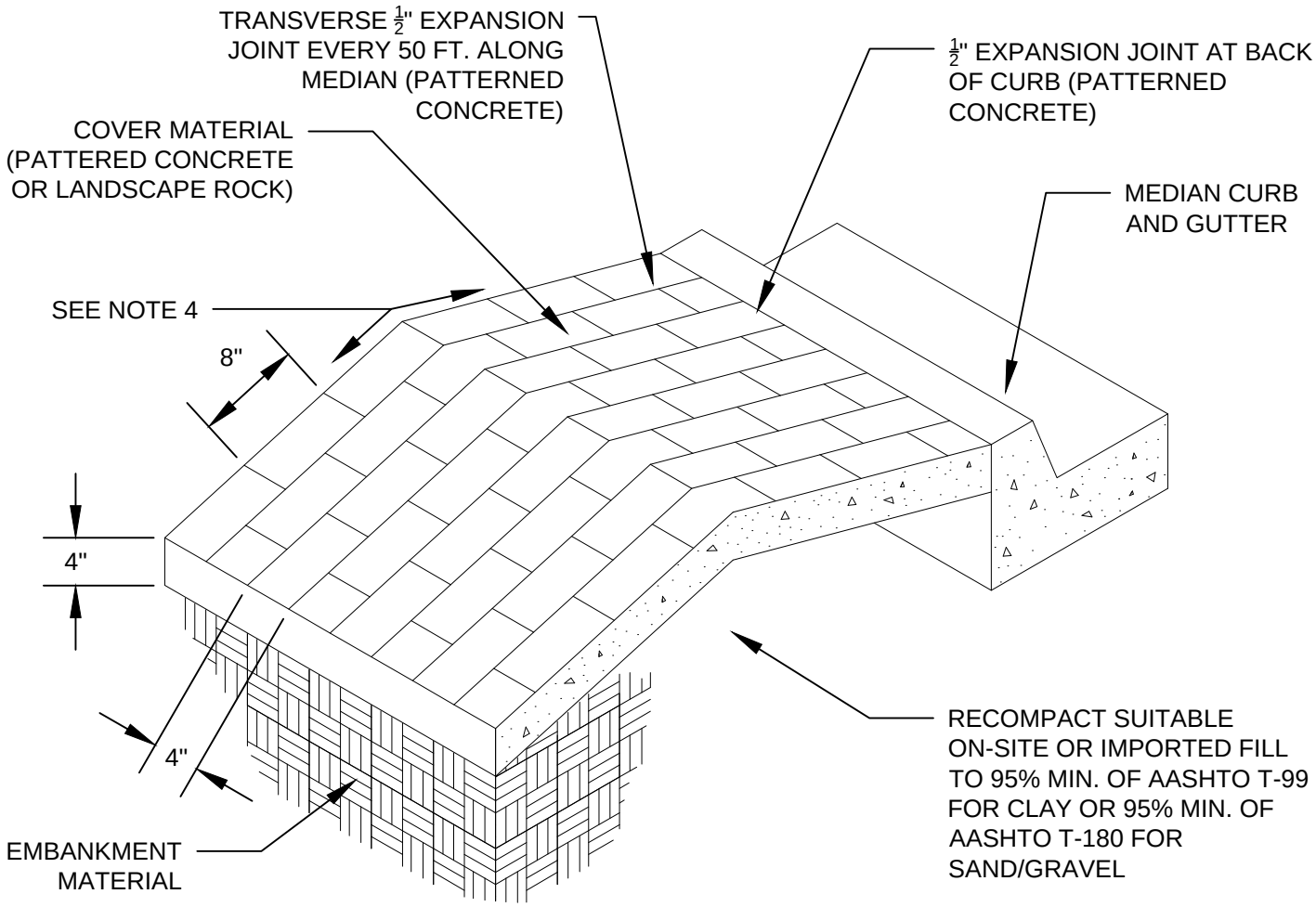

NOTES

1. THE MEDIAN COVER MATERIAL SHALL BE 4" THICK.
2. PATTERNED CONCRETE MEDIAN COVER:
   - INTEGRALLY COLORED CONCRETE, EMBOSSED WITH A RUNNING-BOND BRICK PATTERN AS SHOWN.
   - INSTALL 1/2"X4" EXPANSION MATERIAL AT BACK OF CURB, MEDIAN NOSES, FIXED OBJECTS, AND AT TRANSVERSE JOINTS AT 50 FT. INTERVALS (MAXIMUM) ALONG THE MEDIAN.
   - FOR INTEGRAL COLOR USE DAVIS COLOR SUNSET ROSE OR OMAHA TAN, AS APPROVED BY THE CITY IN ADVANCE.
   - CONCRETE MIX DESIGN SHALL CONFORM TO CDOT CLASS D AND A 28-DAY COMPRESSIVE STRENGTH OF 4000 PSI.
3. LANDSCAPE ROCK MEDIAN COVER:
   - ROCK SHALL BE HORIZON RIVER ROCK COBBLE, 2 INCHES TO 4 INCHES IN SIZE, OR APPROVED EQUAL.
   - COMMERCIAL-GRADE LANDSCAPE WEED BARRIER FABRIC SHALL BE INSTALLED PRIOR TO PLACING ROCK.
   - THE TOP OF LANDSCAPE ROCK SHALL BE FLUSH WITH THE TOP OF THE CURB AND SLOPED TO THE CENTER OF THE MEDIAN PER NOTE 4.
4. COVER MATERIAL CROSS SLOPE MAY VARY IN AREAS WHERE THE CURB AND GUTTER ELEVATIONS ON EACH SIDE OF MEDIAN VARY SIGNIFICANTLY. SLOPE SHALL BE AS APPROVED BY THE CITY IN ADVANCE.
5. WHERE A SIGN IS TO BE PLACED WITHIN THE MEDIAN COVER, INSTALL A 4" PVC SLEEVE THROUGH THE FULL-DEPTH OF MEDIAN COVER MATERIAL. SIGNS PLACEMENT SHALL BE COORDINATED WITH THE CITY.

APPROVAL:

DIRECTOR OF PUBLIC WORKS

REV #	DATE	DESCRIPTION
#	MM/YY	DESC 1
#	MM/YY	DESC 2
#	MM/YY	DESC 3

ROADWAY MEDIAN COVER

DATE: MM/YY

NOT TO SCALE

Centennial

STANDARD DETAIL NO.

SD-10

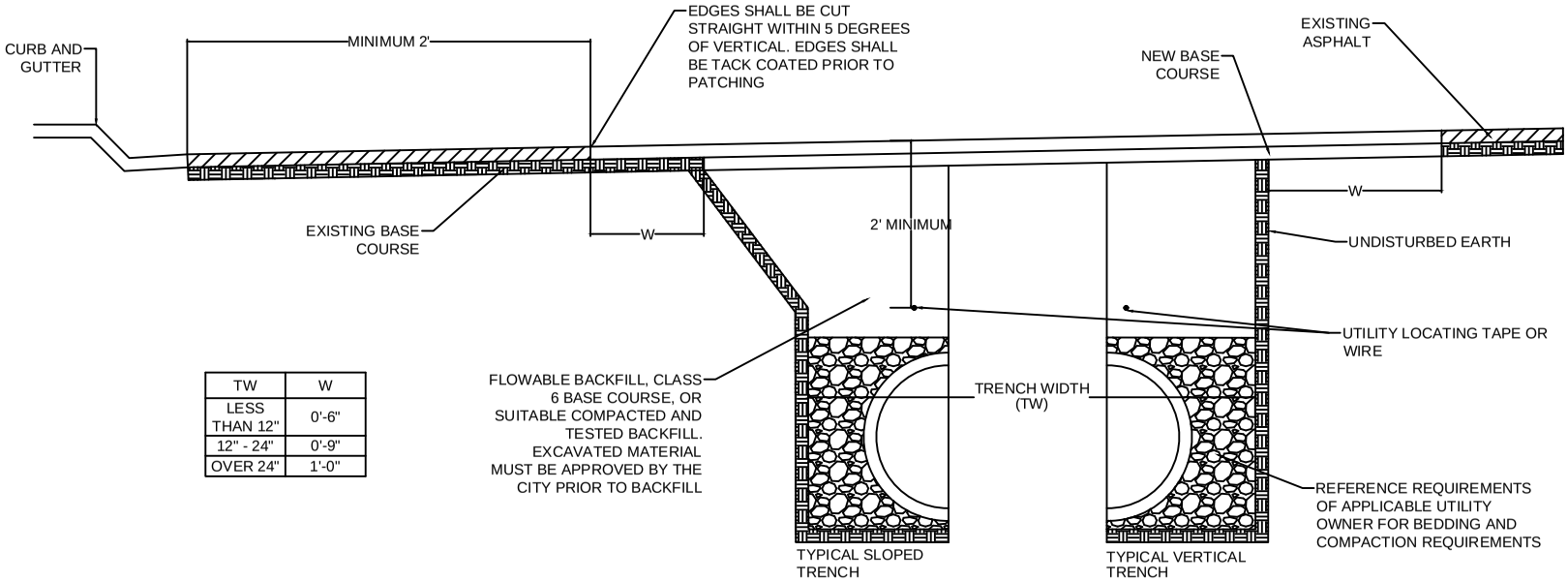

TW	W
LESS THAN 12"	0'-6"
12" - 24"	0'-9"
OVER 24"	1'-0"

NOTES:

1. THIS TRENCH PATCHING DETAIL SPECIFIES REQUIREMENTS IN ADDITION TO THOSE SPECIFIED IN THE MGPEC STANDARDS, LATEST EDITION.
2. ANY UTILITY INSTALLED WITHIN THE ROW OR EASEMENTS SHALL HAVE UTILITY LOCATING TAPE OR WIRE OVER THE TOP OF THE UTILITY LOCATED AT A MINIMUM OF 2'-0" BELOW FINAL GRADE OR LOCATED ON UTILITY IF MINIMUM DEPTH CAN NOT BE ACHIEVED.
3. TRENCH SHALL BE BRACED OR SHEETED AS NECESSARY FOR THE SAFETY OF THE WORKMEN AND PROTECTION OF OTHER UTILITIES OR STRUCTURES IN ACCORDANCE WITH APPLICABLE LOCAL, STATE, AND FEDERAL SAFETY REGULATIONS.
4. THE TRENCH WIDTH SHALL BE CONFINED TO THOSE MINIMUM DIMENSIONS WHICH WILL PERMIT PROPER INSTALLATION AND ACCEPTABLE PIPE LOADING, AS ESTABLISHED BY CURRENT ACCEPTABLE ENGINEERING PRACTICES.
5. EXISTING ASPHALT SHALL BE CUT BACK TO A MINIMUM OF W (SEE ABOVE) BEYOND THE TRENCH LIMITS OR TO SOUND PAVEMENT, WHICHEVER IS GREATER. IF ENCROACHMENT INTO THE OUTSIDE 2-FOOT ZONE, THE 2-FOOT ZONE SHALL BE INCLUDED IN THE REQUIRED PATCH.
6. MORATORIUM STREETS WILL REQUIRE ADDITIONAL PAVEMENT REQUIREMENTS. SEE THE ADMINISTRATIVE REGULATIONS FOR WORK WITHIN THE ROW.

APPROVAL:

DIRECTOR OF PUBLIC WORKS

REV #	DATE	DESCRIPTION
#	MM/YY	DESC 1
#	MM/YY	DESC 2
#	MM/YY	DESC 3

TRENCHING AND BEDDING

DATE: MM/YY

NOT TO SCALE

Centennial

STANDARD DETAIL NO.

SD-11

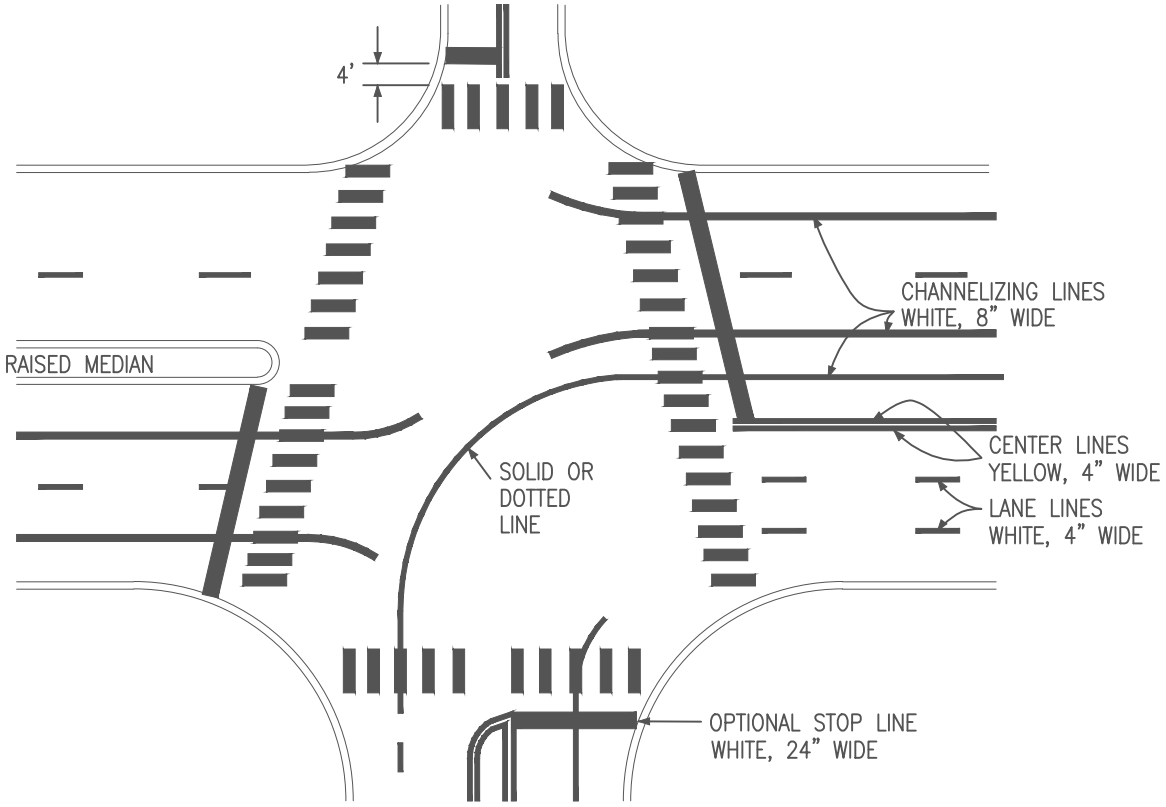

CROSSWALK LINE DETAIL

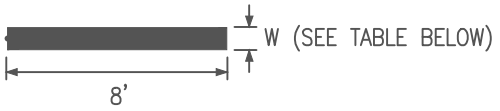

STREET CLASSIFICATION	W
LOCAL	12"
MINOR COLLECTOR	12"
MAJOR COLLECTOR	24"
ARTERIAL	24"

LAYOUT NOTES

1. CENTER CROSSWALKS ON HANDICAP RAMPS. IF SUCH RAMPS ARE NOT PROVIDED, CENTER ON SIGNAL POLES WHEREVER PRACTICAL.
2. CROSSWALKS SHOULD BE STRIPED EVERY 6' ON-CENTER OR CENTERED ON LANE LINE.

APPROVAL:

DIRECTOR OF PUBLIC WORKS

REV #	DATE	DESCRIPTION
#	MM/YY	DESC 1
#	MM/YY	DESC 2
#	MM/YY	DESC 3

TYPICAL INTERSECTION MARKINGS

DATE: MM/YY

NOT TO SCALE

Centennial

STANDARD DETAIL NO.

SD-12

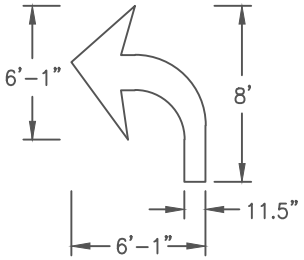

AREA = 15.5 SQ.FT.

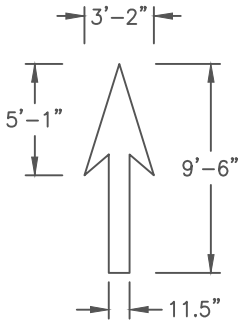

AREA = 12.5 SQ.FT.

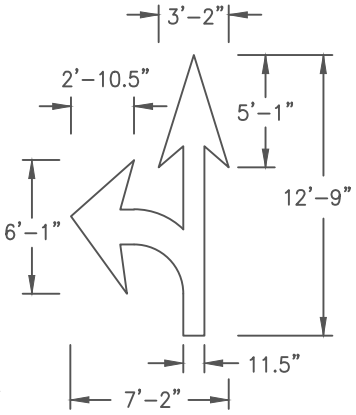

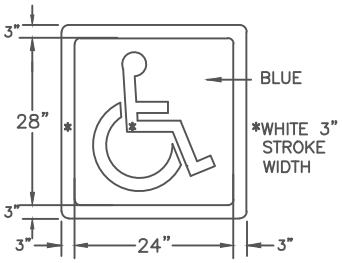

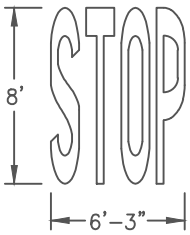

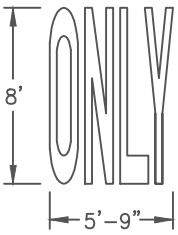

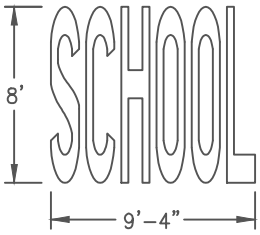

1-LANE SCHOOL

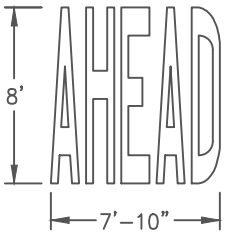

TYPICAL LETTER MEASUREMENTS

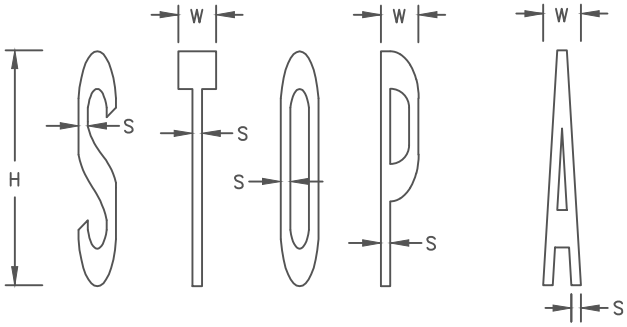

H = HEIGHT	H = 8'	H = 4'
W = WIDTH	W = 1'-3.4" TO 1'-4"	W = 7.7" TO 8"
S = STROKE	S = 3.8" TO 4"	S = 1.9" TO 2"

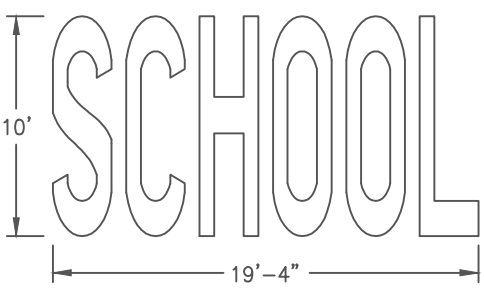

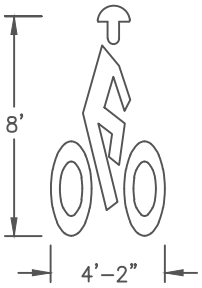

STROKE = 8"
2-LANE SCHOOL

AREA = 11.9 SQ.FT.

DESIGNATED PAYMENT AREAS

FOR THE FOLLOWING H, W, AND S DIMENSIONS PAY:

H = 8' WORDS

STOP - 23.0 SQ.FT.	SCHOOL(1L) - 33.0 SQ.FT.
ONLY - 22.5 SQ.FT.	SCHOOL(2L) - 85.0 SQ.FT.
AHEAD - 29.0 SQ.FT.	

NOTES

IF HEIGHT IS INCREASED OR DECREASED THEN ALL MEASUREMENTS CHANGE PROPORTIONATELY. EXAMPLE: "H" MEASUREMENT FOR STOP IS REDUCED TO 4' FROM 8' THEN SQUARE FEET = 5.75 (1/4 OF 23.0 SQ. FT.).

APPROVAL:

DIRECTOR OF PUBLIC WORKS

REV #	DATE	DESCRIPTION
#	MM/YY	DESC 1
#	MM/YY	DESC 2
#	MM/YY	DESC 3

PAVEMENT MARKINGS - WORDS AND SYMBOLS

DATE: MM/YY

NOT TO SCALE

Centennial

STANDARD DETAIL NO.

SD-13

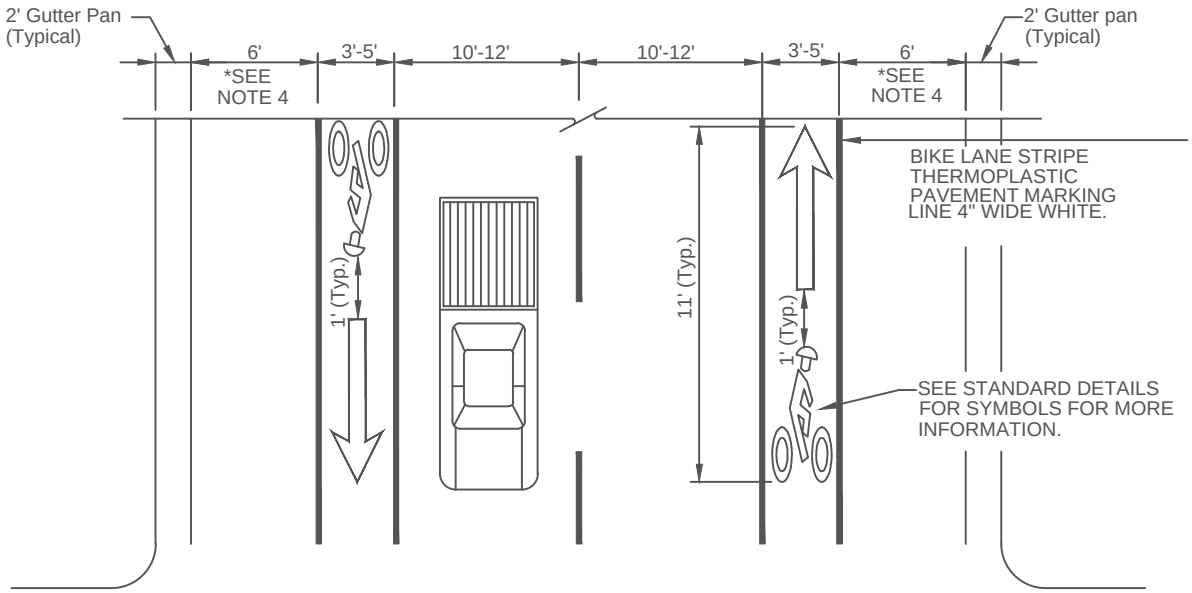

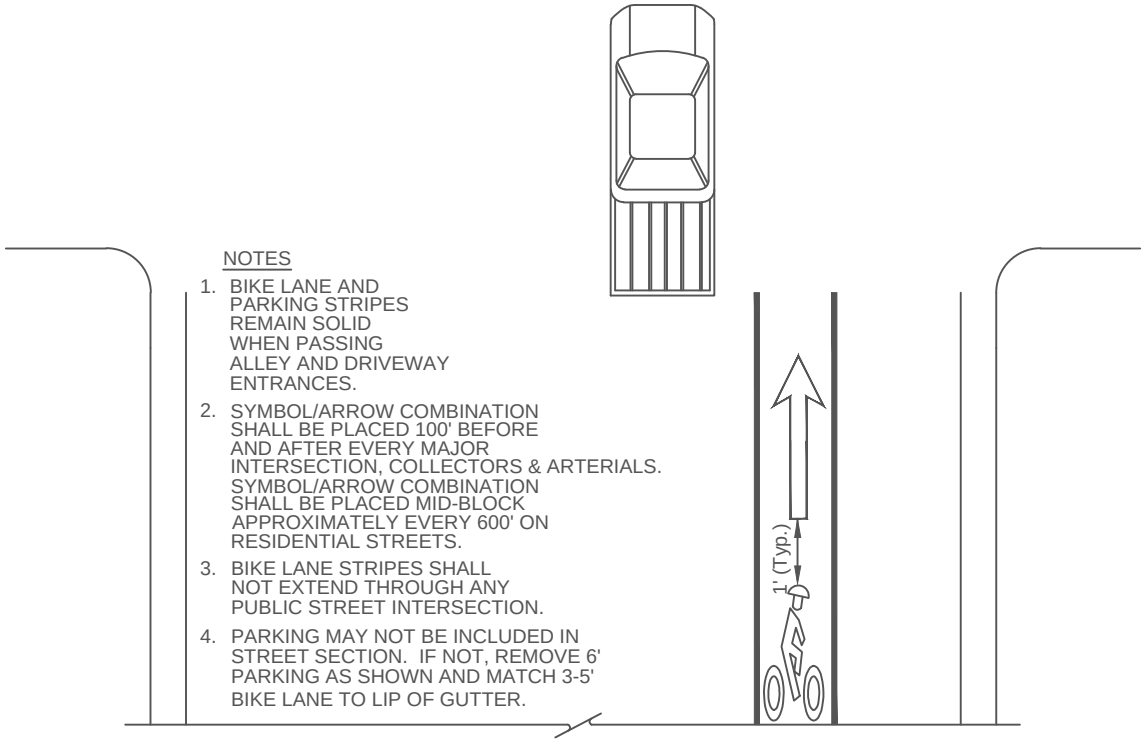

NOTES

1. BIKE LANE AND PARKING STRIPES REMAIN SOLID WHEN PASSING ALLEY AND DRIVEWAY ENTRANCES.
2. SYMBOL/ARROW COMBINATION SHALL BE PLACED 100' BEFORE AND AFTER EVERY MAJOR INTERSECTION, COLLECTORS & ARTERIALS. SYMBOL/ARROW COMBINATION SHALL BE PLACED MID-BLOCK APPROXIMATELY EVERY 600' ON RESIDENTIAL STREETS.
3. BIKE LANE STRIPES SHALL NOT EXTEND THROUGH ANY PUBLIC STREET INTERSECTION.
4. PARKING MAY NOT BE INCLUDED IN STREET SECTION. IF NOT, REMOVE 6' PARKING AS SHOWN AND MATCH 3-5' BIKE LANE TO LIP OF GUTTER.

APPROVAL:

DIRECTOR OF PUBLIC WORKS

REV #	DATE	DESCRIPTION
#	MM/YY	DESC 1
#	MM/YY	DESC 2
#	MM/YY	DESC 3

TYPICAL BIKE LANE PAVEMENT MARKINGS

DATE: MM/YY

NOT TO SCALE

Centennial

STANDARD DETAIL NO.

SD-14

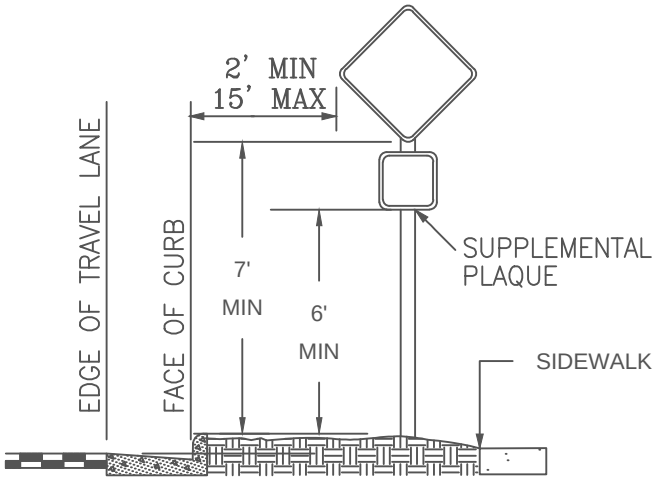

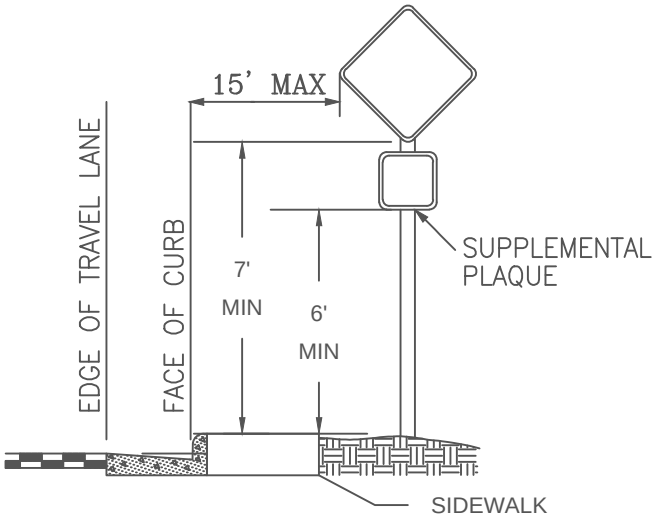

WITH CURB AND GUTTER

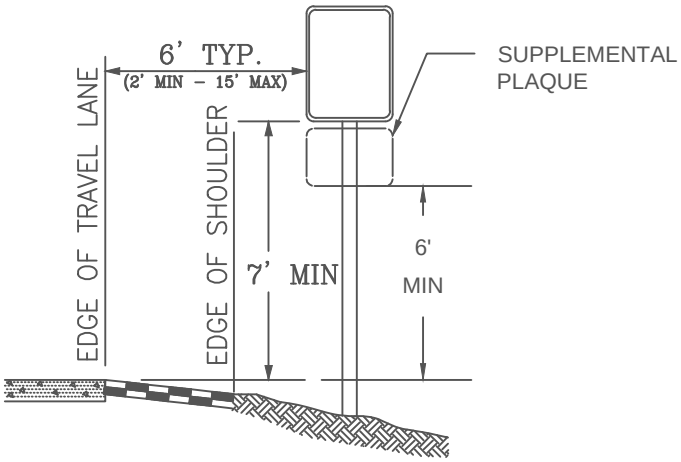

WITHOUT CURB AND GUTTER

NOTES:

1. MINIMUM MOUNTING HEIGHT FOR SIGNS IS THE BOTTOM OF THE PRIMARY SIGN WHEN THERE IS NOT A SUPPLEMENTAL SIGN, OR THE BOTTOM OF THE SUPPLEMENTAL SIGN WHEN USED.
2. PLACE SIGN BEHIND SIDEWALK AT 7 FT MINIMUM HEIGHT WHEN SIDEWALK IS ADJACENT TO CURB AND GUTTER.
3. SIGN MINIMUM HEIGHT IS SHOWN. SIGN MAXIMUM HEIGHT IS 1 FT ABOVE MINIMUM MOUNTING HEIGHT.
4. PROVIDE A 7 FT MINIMUM MOUNTING HEIGHT FOR ALL SIGNS AND PLAQUES WHEN SIGN ENCROACHES 4 IN OR MORE LATERALLY ABOVE PEDESTRIAN WALKWAY.
5. SPECIAL CARE SHOULD BE TAKEN IN SIGN LOCATION TO ENSURE AN UNOBSTRUCTED VIEW OF EACH SIGN.

APPROVAL:

DIRECTOR OF PUBLIC WORKS

REV #	DATE	DESCRIPTION
#	MM/YY	DESC 1
#	MM/YY	DESC 2
#	MM/YY	DESC 3

GROUND SIGN PLACEMENT

DATE: MM/YY

NOT TO SCALE

Centennial

STANDARD DETAIL NO.

SD-15

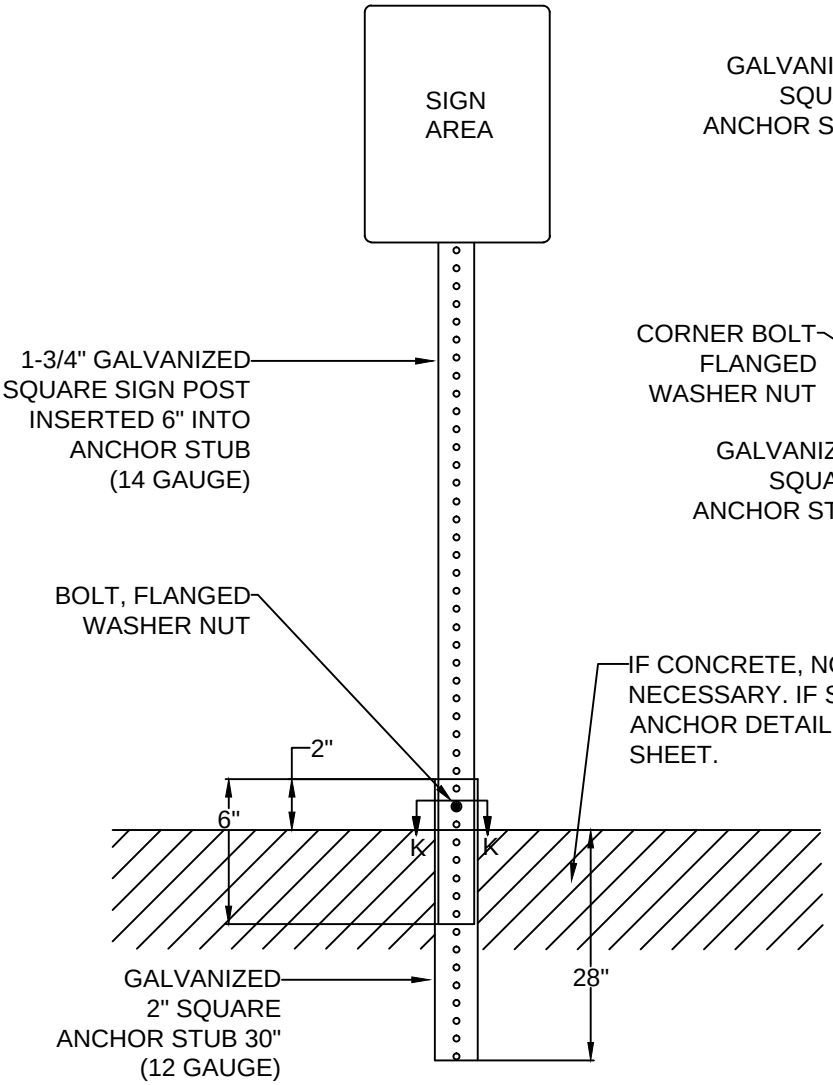

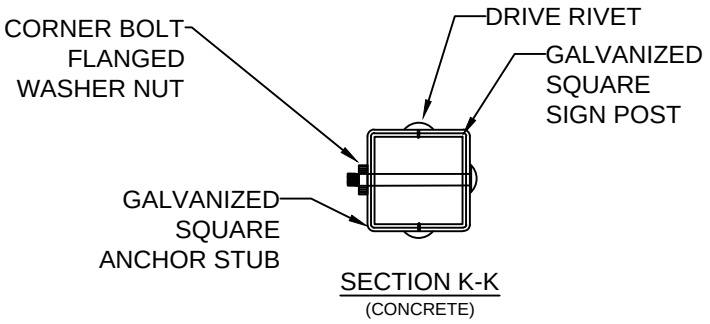

SECTION K-K
(CONCRETE)

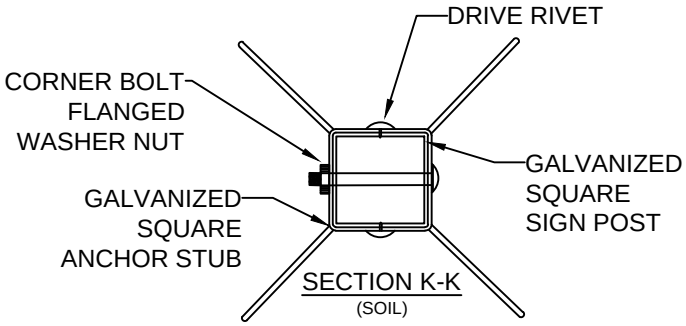

SECTION K-K
(SOIL)

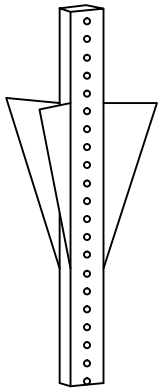

SIGN POST:
12 GAUGE
2" SQUARE x 30"

WINGS:
10 GAUGE
4" x 12"
ASTM A569 COM.
WELDED TO ALL 4 CORNERS STARTING 2.5" DOWN FROM TOP

MULTI-DIRECTIONAL ANCHOR
(FOR USE IN SOIL)

NOTES
1. BOLT WILL BE INSTALLED PERPENDICULAR TO THE DIRECTION OF TRAVEL.

APPROVAL:

DIRECTOR OF PUBLIC WORKS

REV #	DATE	DESCRIPTION
#	MM/YY	DESC 1
#	MM/YY	DESC 2
#	MM/YY	DESC 3

SIGNAGE - POSTS AND ANCHORING

DATE: MM/YY

NOT TO SCALE

Centennial

STANDARD DETAIL NO.

SD-16

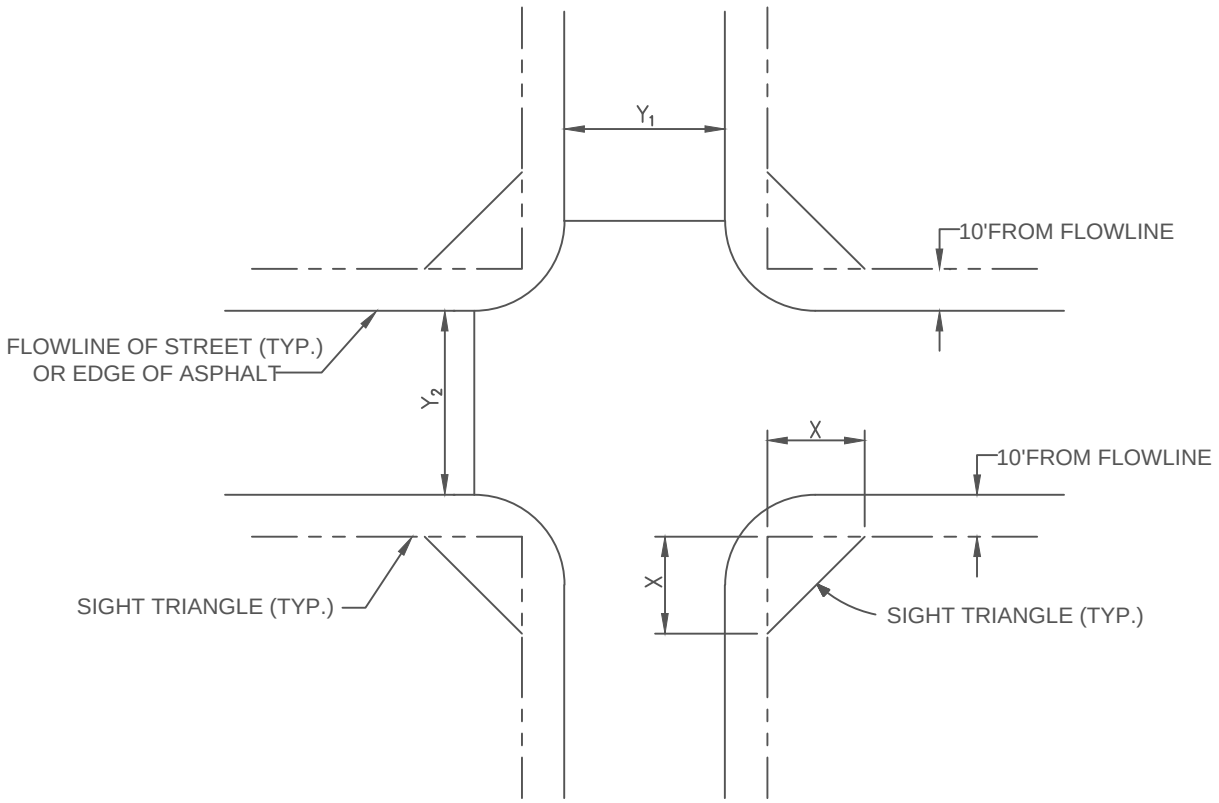

NOTE: IF $Y_1 \neq Y_2$ USE THE LARGER OF THE TWO TO DETERMINE THE "LEG LENGTH" OF THE SIGHT TRIANGLE

FLOWLINE TO FLOWLINE (Y)	LEG LENGTH (X)
$\leq$ 36 FT	30 FT
36 - 45 FT	40 FT
$\geq$ 45 FT	50 FT

APPROVAL:

DIRECTOR OF PUBLIC WORKS

REV #	DATE	DESCRIPTION
#	MM/YY	DESC 1
#	MM/YY	DESC 2
	MM/YY	DESC 3

SIGHT TRIANGLE

DATE: MM/YY

NOT TO SCALE

Centennial

STANDARD DETAIL NO.

SD-17

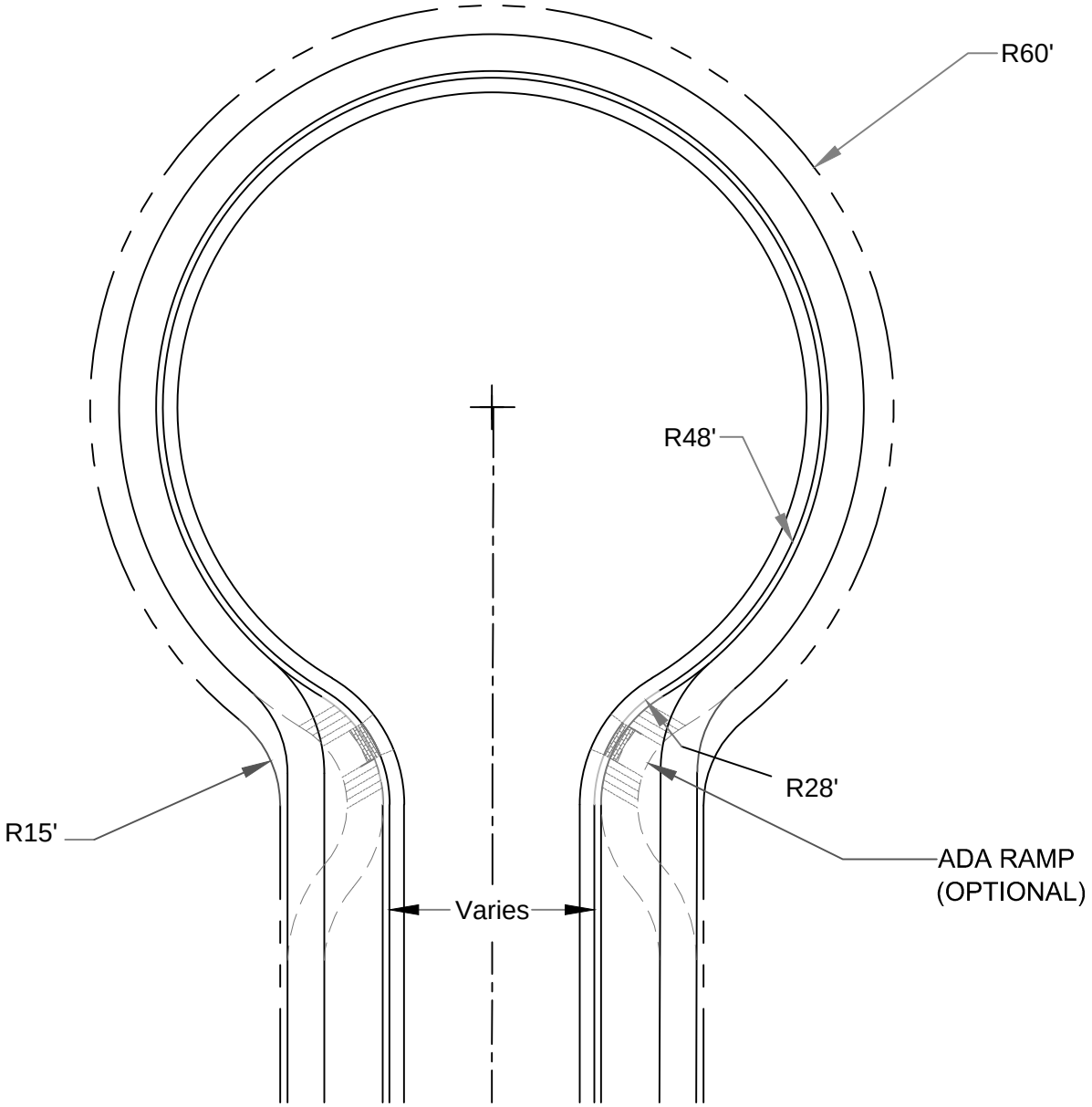

CURRENT RADIUS IS 48' TO FLOWLINE
AND 5' ATTACHED SIDEWALK
WITH 60' RADIUS RIGHT- OF - WAY

APPROVAL:

DIRECTOR OF PUBLIC WORKS

REV #	DATE	DESCRIPTION
#	MM/YY	DESC 1
#	MM/YY	DESC 2
#	MM/YY	DESC 3

STANDARD CUL-DE-SAC BULB

DATE: MM/YY

NOT TO SCALE

Centennial

STANDARD DETAIL NO.

SD-18

LOCAL RESIDENTIAL ATTACHED WALK (<1000 ADT)

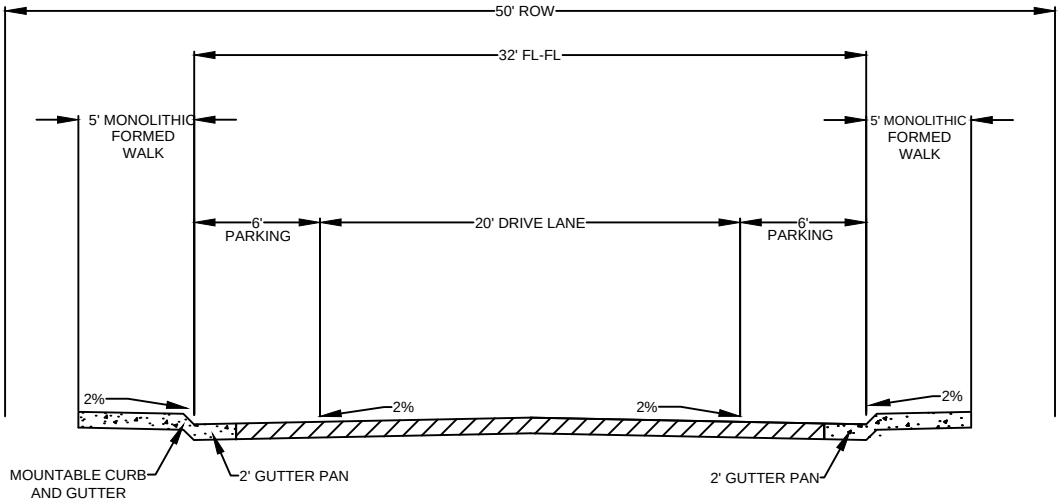

NOTES:
1. DRIVEWAYS SHALL NOT EXCEED 2% SLOPE IN ANY DIRECTION UNTIL BACK OF WALK.
2. DRIVEWAYS SHALL EXTEND 18-FEET MINIMUM FROM BACK OF WALK TO THE STRUCTURE.

LOCAL RESIDENTIAL DETACHED WALK (<1000 ADT)

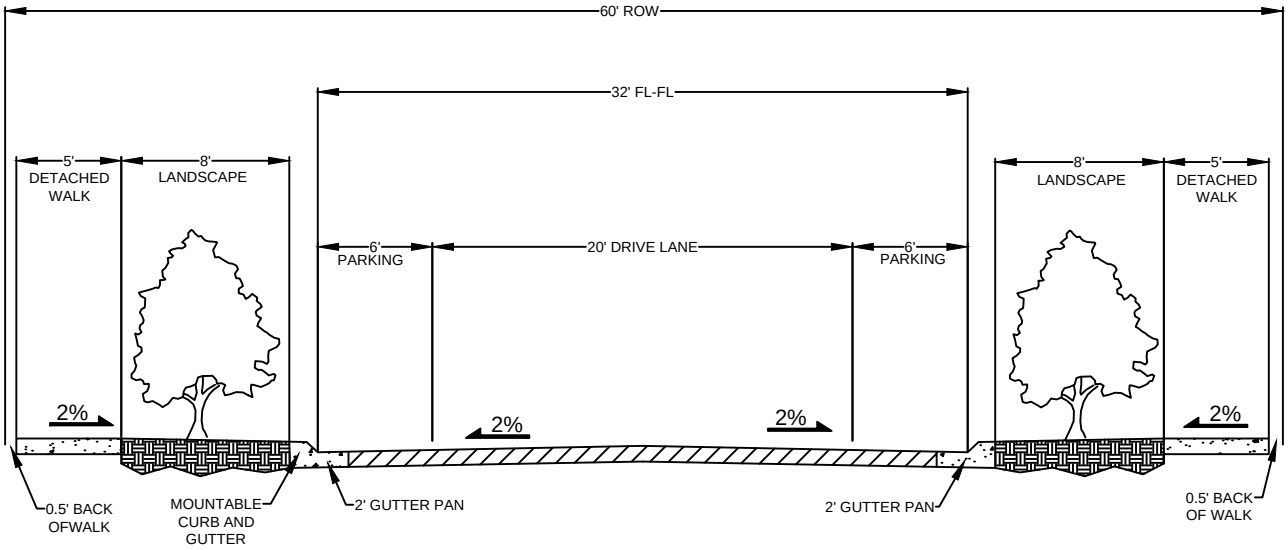

NOTES:
1. DRIVEWAYS SHALL NOT EXCEED 2% SLOPE IN ANY DIRECTION UNTIL BACK OF WALK.
2. DRIVEWAYS SHALL EXTEND 18-FEET MINIMUM FROM BACK OF WALK TO THE STRUCTURE.

APPROVAL:

DIRECTOR OF PUBLIC WORKS

REV #	DATE	DESCRIPTION
#	MM/YY	DESC 1
#	MM/YY	DESC 2
#	MM/YY	DESC 3

TYPICAL LOCAL RESIDENTIAL STREET CROSS-SECTIONS

DATE: MM/YY

NOT TO SCALE

Centennial

STANDARD DETAIL NO.

SD-19

LOCAL COMMERCIAL (<3,000 ADT)

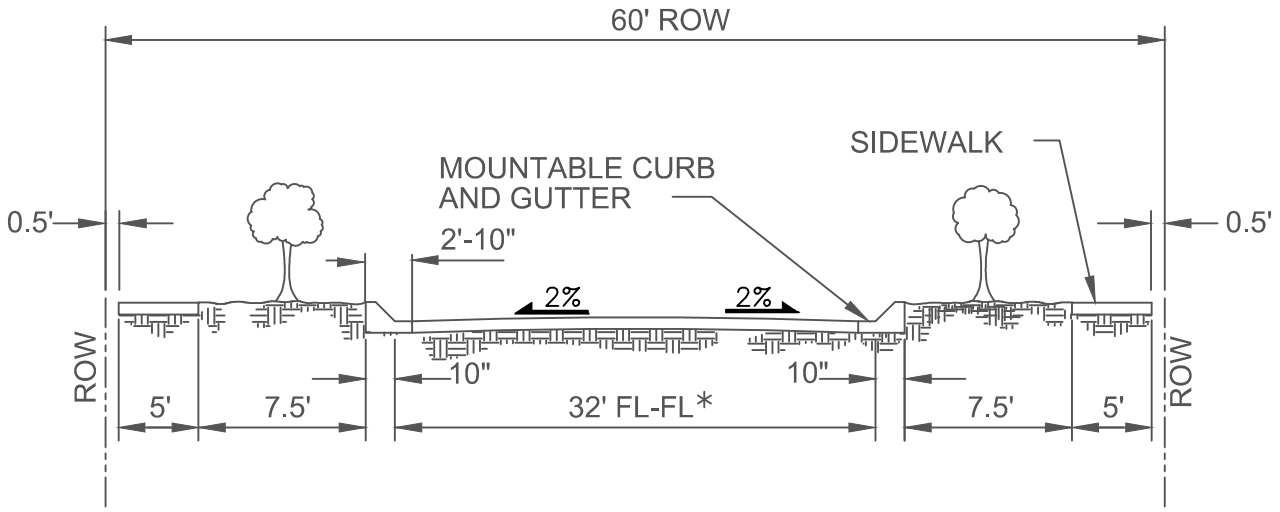

NOTES:
1. LEFT–TURN LANES AT INTERSECTIONS AND ACCESSES AS NECESSARY.
2. LIMITED AND RESTRICTED ACCESS.
3. NO SINGLE FAMILY RESIDENTIAL FRONTAGE OR RESIDENTIAL DRIVEWAY ACCESS.

* WITH ON–STREET PARKING, ADD 6–FEET TO EACH SIDE.

MINOR COLLECTOR (<8,000 ADT)

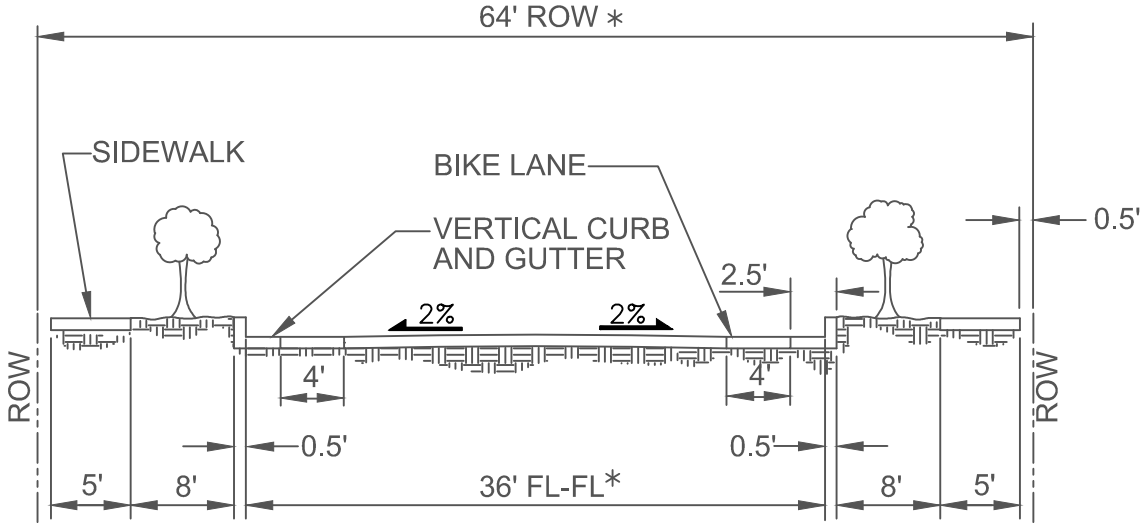

NOTES:
1. LEFT–TURN LANES AT INTERSECTIONS AND ACCESSES AS NECESSARY.
2. LIMITED AND RESTRICTED ACCESS.
3. NO SINGLE FAMILY RESIDENTIAL FRONTAGE OR DRIVEWAY ACCESS.

* WITH ON–STREET PARKING, ADD 6–FEET TO EACH SIDE.

APPROVAL:

DIRECTOR OF PUBLIC WORKS

REV #	DATE	DESCRIPTION
#	MM/YY	DESC 1
#	MM/YY	DESC 2
#	MM/YY	DESC 3

TYPICAL LOCAL COMMERCIAL AND COLLECTOR STREET CROSS-SECTIONS

DATE: MM/YY

NOT TO SCALE

Centennial

STANDARD DETAIL NO.

SD-20

MAJOR COLLECTOR (<15,000 ADT)

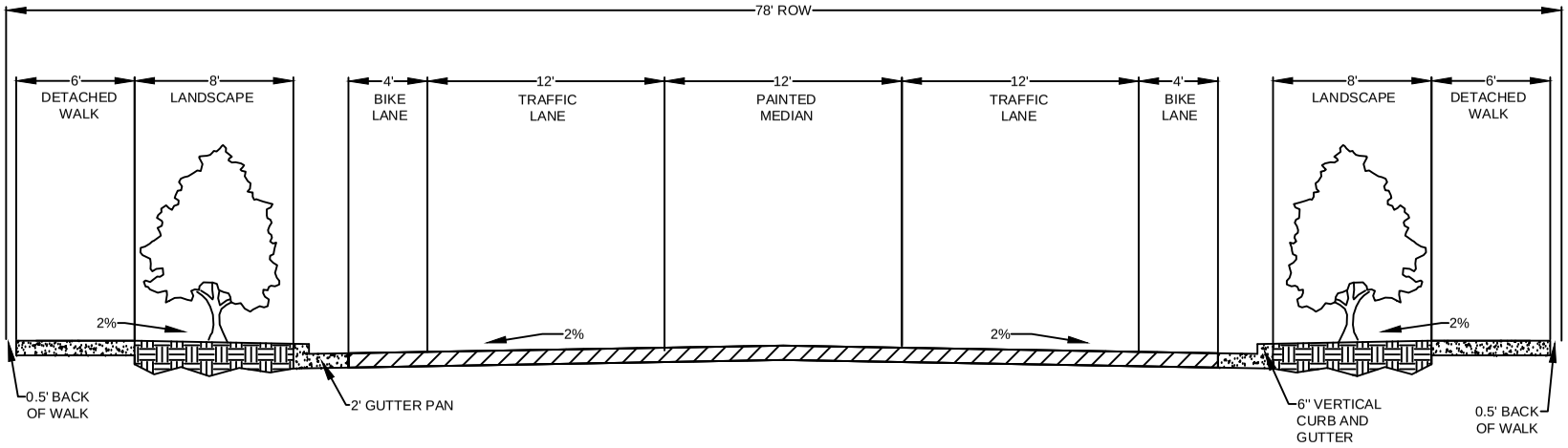

NOTES:

1. DIRECT BACKING ACCESS (RESIDENTIAL DRIVEWAYS) SHALL BE PROHIBITED ON MAJOR COLLECTOR ROADWAYS.
2. ON STREETS WHERE BIKE LANE MARKING/DESIGNATION HAS BEEN APPROVED, AT INTERSECTIONS WHERE AUXILIARY LANES ARE REQUIRED BIKE LANES SHALL CONTINUE THROUGH AND THE AUXILIARY LANE. VEHICLES SHALL YIELD TO BIKE TRAFFIC.

APPROVAL:

DIRECTOR OF PUBLIC WORKS

REV #	DATE	DESCRIPTION
#	MM/YY	DESC 1
#	MM/YY	DESC 2
#	MM/YY	DESC 3

TYPICAL MAJOR COLLECTOR STREET CROSS-SECTION

DATE: MM/YY

NOT TO SCALE

Centennial

STANDARD DETAIL NO.

SD-21

FOUR-LANE ARTERIAL (<30,000 ADT)

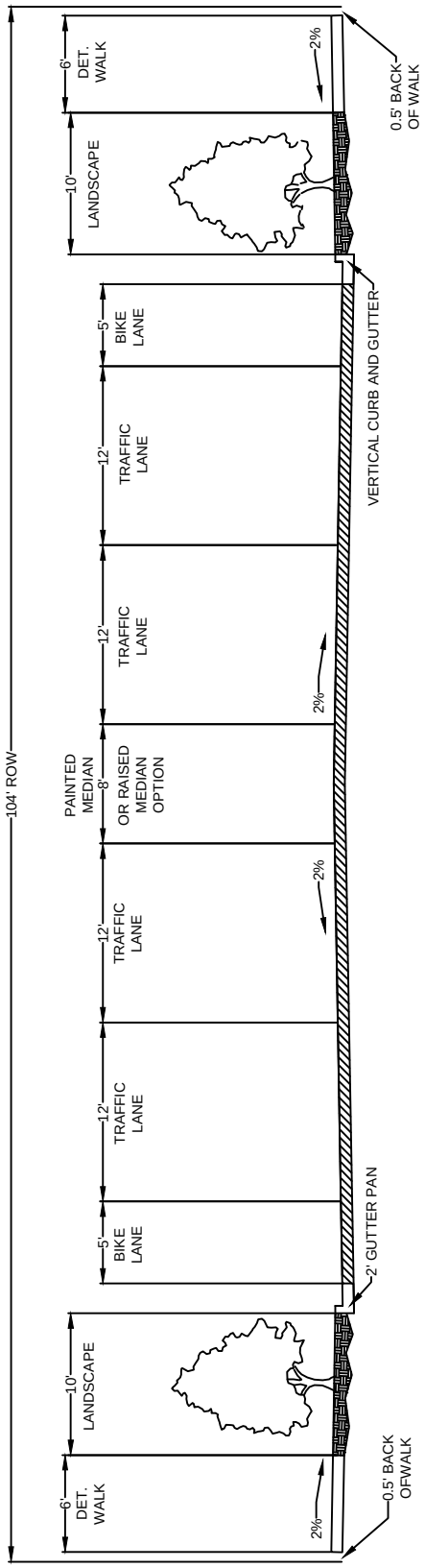

NOTES:
1. ON STREETS WHERE BIKE LANE MARKING/DESIGNATION HAS BEEN APPROVED, BIKE LANES AT INTERSECTIONS WHERE AUXILIARY LANES ARE REQUIRED BIKE LANES SHALL CONTINUE THROUGH AND AUXILIARY LANE VEHICLES SHALL YIELD TO BIKE TRAFFIC.
2. MEANDERING SIDEWALK IS PERMISSIBLE PROVIDED IT REMAINS WITHIN RIGHT-OF-WAY OR ADEQUATE PUBLIC USE EASEMENTS ARE DEDICATED.

APPROVAL:

DIRECTOR OF PUBLIC WORKS

REV #	DATE	DESCRIPTION
#	MM/YY	DESC 1
#	MM/YY	DESC 2
#	MM/YY	DESC 3

TYPICAL FOUR-LANE ARTERIAL STREET CROSS-SECTION

DATE: MM/YY

NOT TO SCALE

Centennial

STANDARD DETAIL NO.

SD-22

SIX-LANE PRINCIPAL ARTERIAL (>30,000 ADT)

WITHOUT BIKE LANES

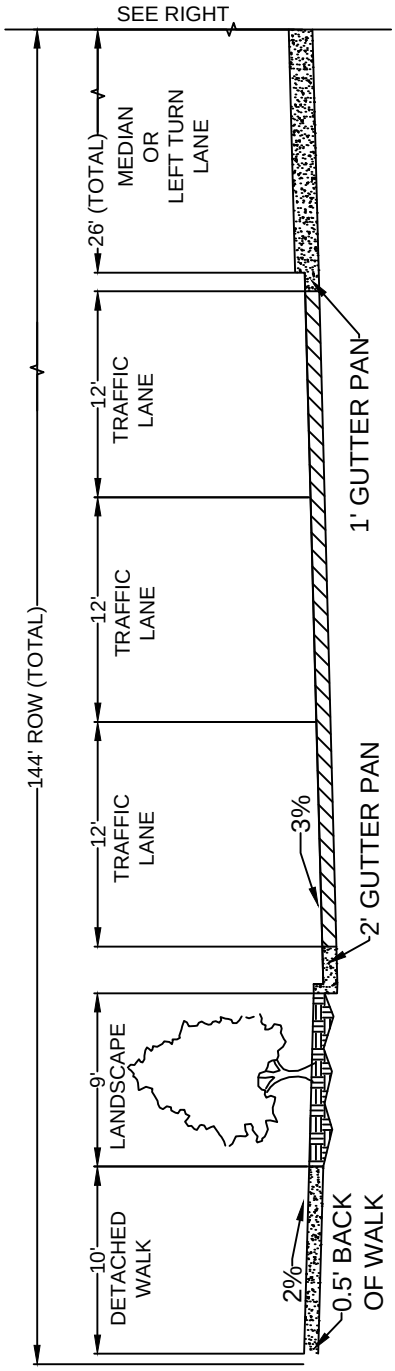

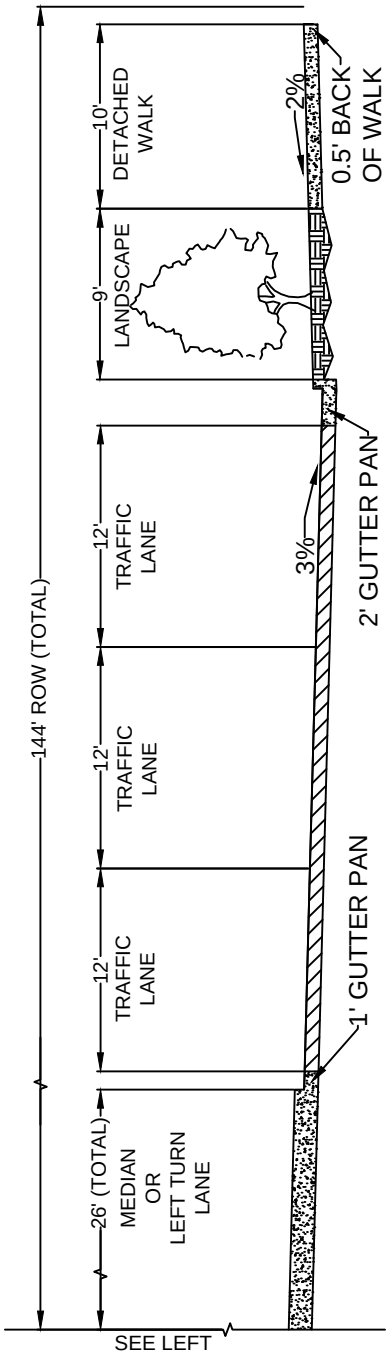

NOTES:

1. MEANDERING SIDEWALK IS PERMISSIBLE PROVIDED IT REMAINS WITHIN RIGHT-OF-WAY OR ADEQUATE PUBLIC USE EASEMENTS ARE DEDICATED.
2. SEE STANDARD DETAIL FOR MEDIAN COVER FOR MORE INFORMATION ON RAISED MEDIAN REQUIREMENTS.

APPROVAL:

DIRECTOR OF PUBLIC WORKS

REV #	DATE	DESCRIPTION
#	MM/YY	DESC 1
#	MM/YY	DESC 2
#	MM/YY	DESC 3

TYPICAL SIX-LANE PRINCIPAL ARTERIAL STREET CROSS-SECTION

DATE: MM/YY

NOT TO SCALE

Centennial

STANDARD DETAIL NO.

SD-23

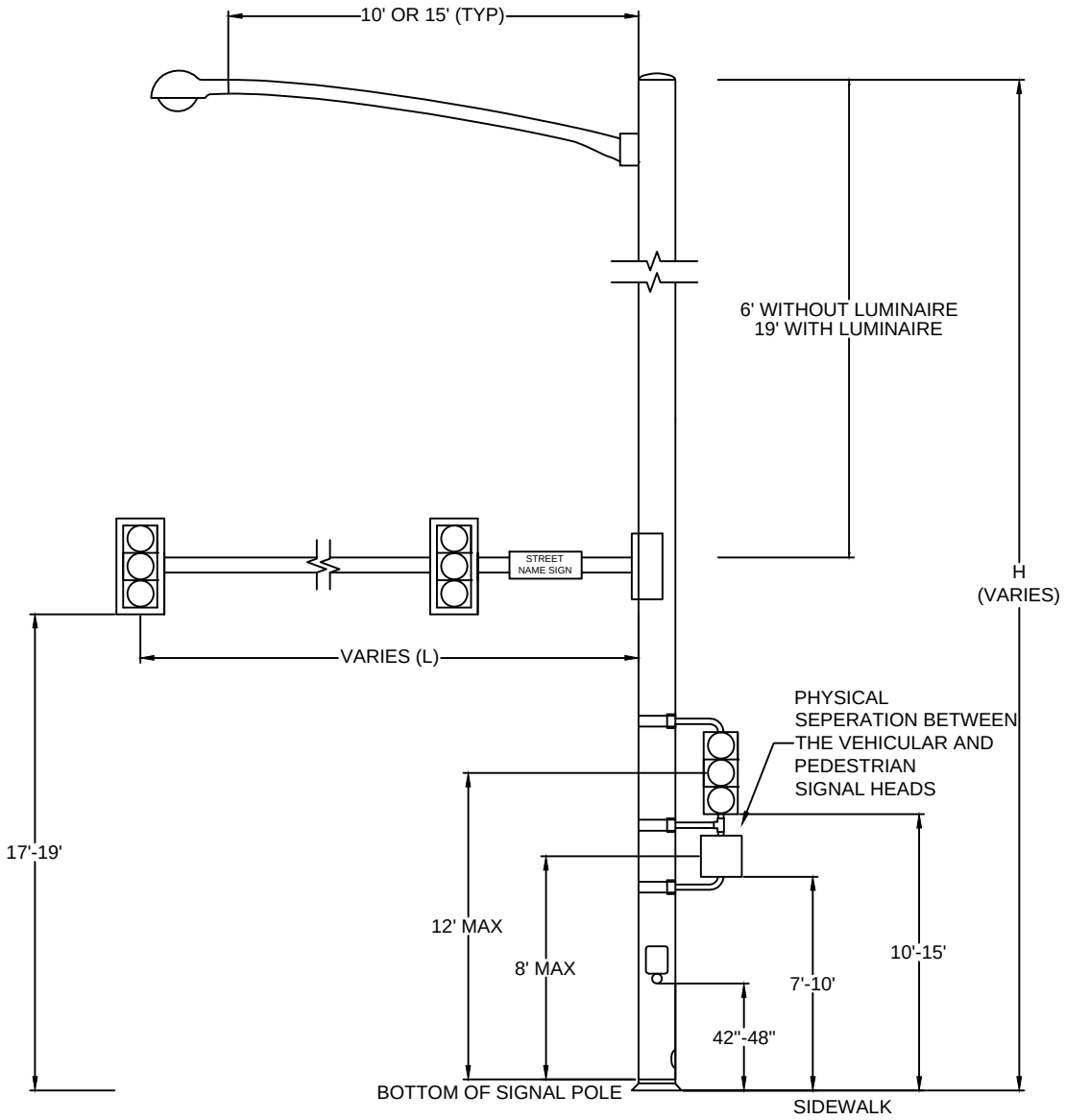

NOTES:

1. ALL SIGNAL HEADS AND HARDWARE SHALL BE FIELD POSITIONED.
2. SIGNAL HEADS MOUNTED ON THE MAST ARM SHALL BE ATTACHED WITH ASTRO-BRAC, SKY BRACKET OR APPROVED EQUAL MOUNTING HARDWARE. OVERHEAD SIGNAL HEADS SHALL HAVE BACK PLATES.
3. SIGNAL AND PEDESTRIAN HEADS MOUNTED ON THE POLE SHALL BE ATTACHED WITH PIPE COUPLINGS OR APPROVED EQUAL SIZED TO THE SPECIFIC SIGNAL HEAD ARRANGEMENT.
4. THE BOTTOM OF ALL MAST ARM-MOUNTED SIGNAL HEADS SHALL BE ON THE SAME HORIZONTAL PLANE AND HAVE A MINIMUM CLEARANCE OF 17 FEET AND MAXIMUM OF 19 FEET ABOVE THE PAVEMENT SURFACE AT THE CENTER OF THE ROADWAY, UNLESS OTHERWISE SPECIFIED.
5. SEE TRAFFIC SIGNAL PLANS FOR L AND H DIMENSIONS.

APPROVAL:

DIRECTOR OF PUBLIC WORKS

REV #	DATE	DESCRIPTION
#	MM/YY	DESC 1
#	MM/YY	DESC 2
#	MM/YY	DESC 3

TRAFFIC SIGNALS

DATE: MM/YY

NOT TO SCALE

Centennial

STANDARD DETAIL NO.

SD-24

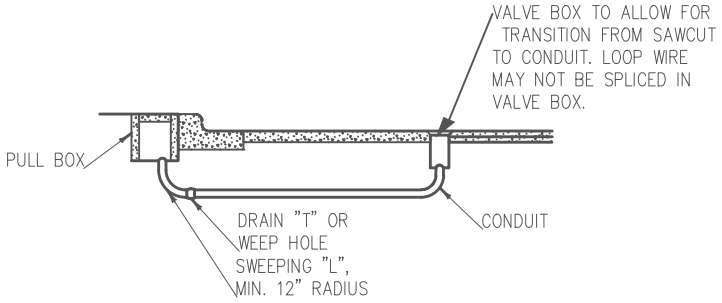

LOOP DETECTOR LEAD–IN

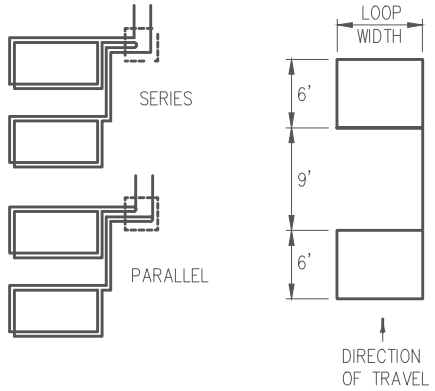

STANDARD LOOP

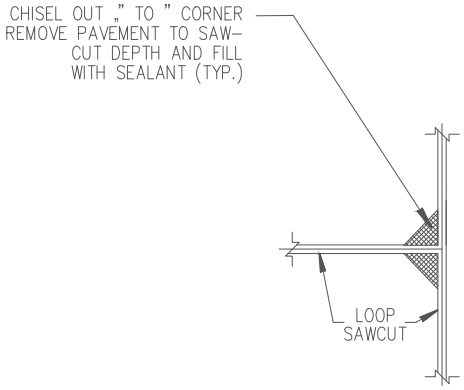

T – SAWCUT DETAIL

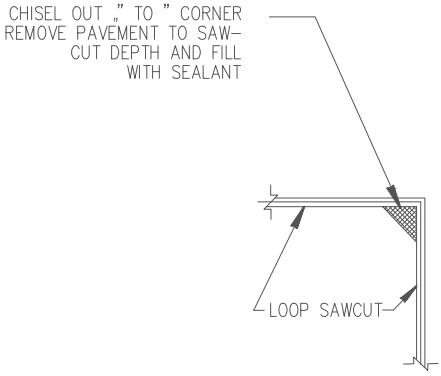

CORNER SAWCUT DETAIL

LOOP INSTALLATION PROCEDURE

1. CUT SLOTS IN PAVEMENT TO 3 IN. MINIMUM DEPTH.
2. CLEAN AND DRY SLOTS WITH OIL–FREE COMPRESSED AIR.
3. ONE CONTINUOUS LENGTH OF 14/IC, RHW, USE, XLPE, RHWN OR THWN WIRE SHALL BE USED FOR EACH LOOP FROM PULL BOX AROUND THE LOOP WITH THE NUMBER OF TURNS SPECIFIED AND BACK TO THE PULL BOX. LOOP WIRE SHALL BE DUCT TYPE. LOOP WIRE MAY NOT BE SPLICED.
4. USE A BLUNT, NON–METALLIC INSTRUMENT TO PUSH WIRE INTO SLOT. DO NOT COIL LEADS.
5. CONNECT DETECTOR AND TEST LOOP.
6. SEAL SLOTS AS SPECIFIED.

APPROVAL:

DIRECTOR OF PUBLIC WORKS

REV #	DATE	DESCRIPTION
#	MM/YY	DESC 1
#	MM/YY	DESC 2
#	MM/YY	DESC 3

TRAFFIC LOOP (1)

DATE: MM/YY

NOT TO SCALE

Centennial

STANDARD DETAIL NO.

SD-25

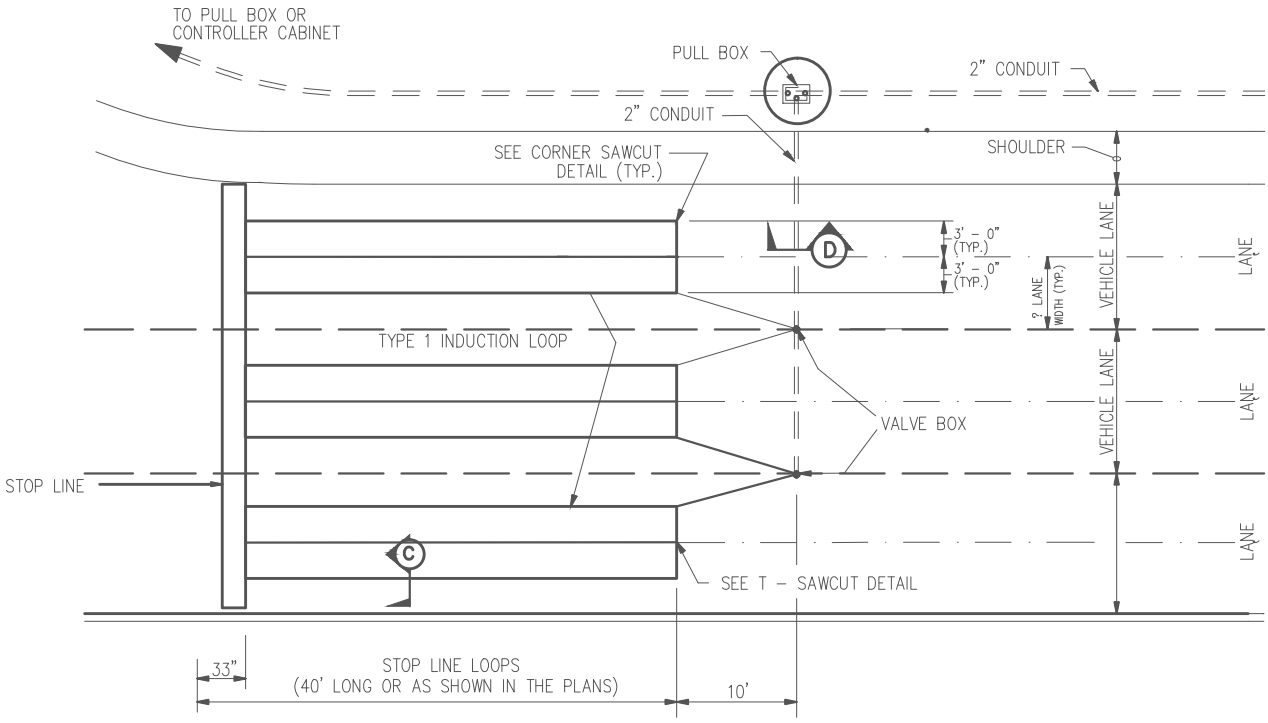

STOP LINE LOOPS – PLAN VIEW

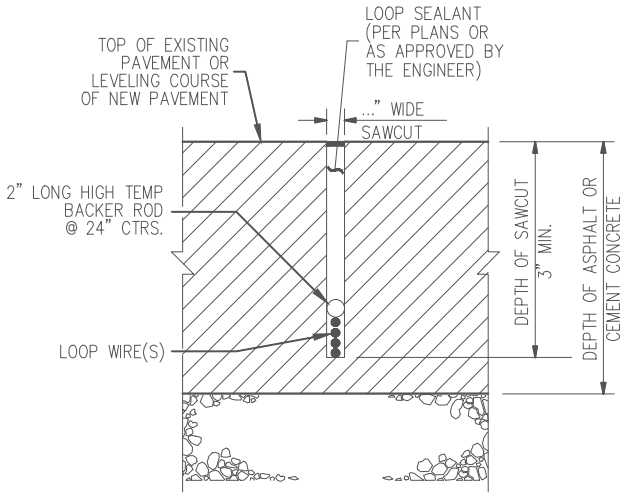

SECTION C–C

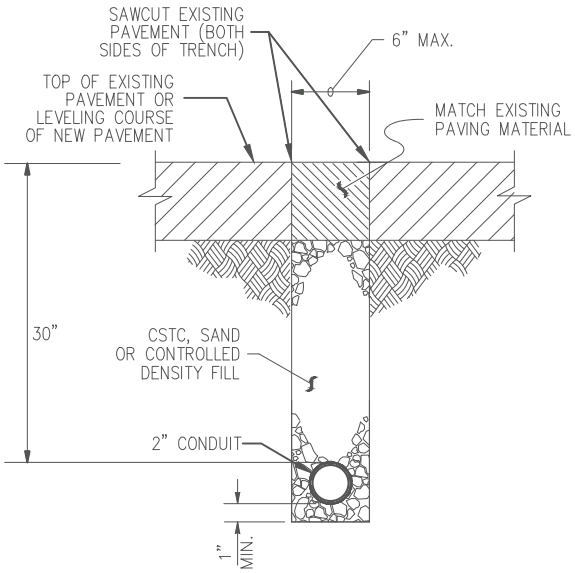

SECTION D–D

APPROVAL:

DIRECTOR OF PUBLIC WORKS

REV #	DATE	DESCRIPTION
#	MM/YY	DESC 1
#	MM/YY	DESC 2
#	MM/YY	DESC 3

TRAFFIC LOOP (2)

DATE: MM/YY

NOT TO SCALE

Centennial

STANDARD DETAIL NO.

SD-26

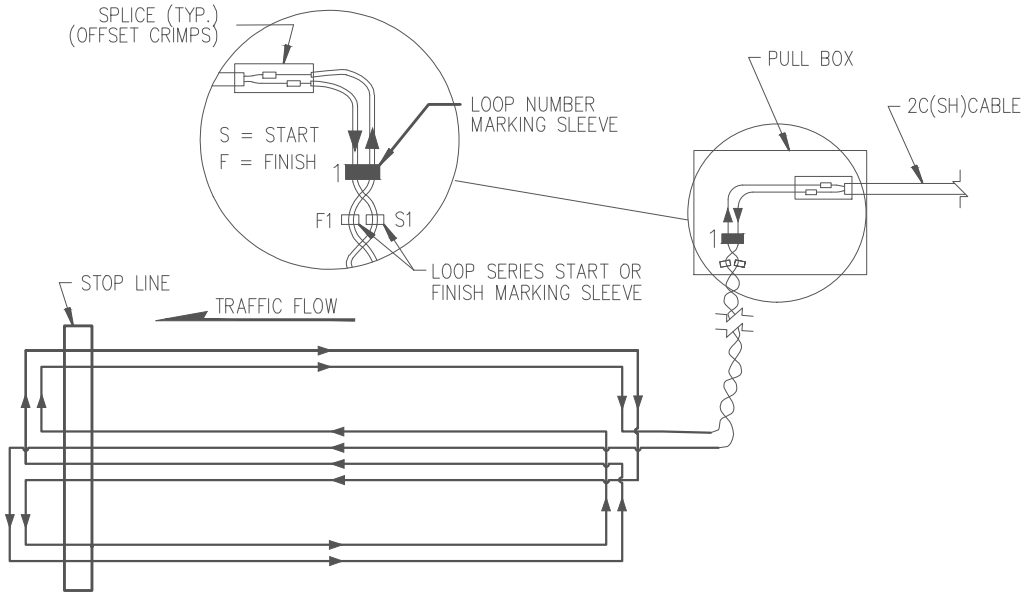

LOOP WIRING DIAGRAM

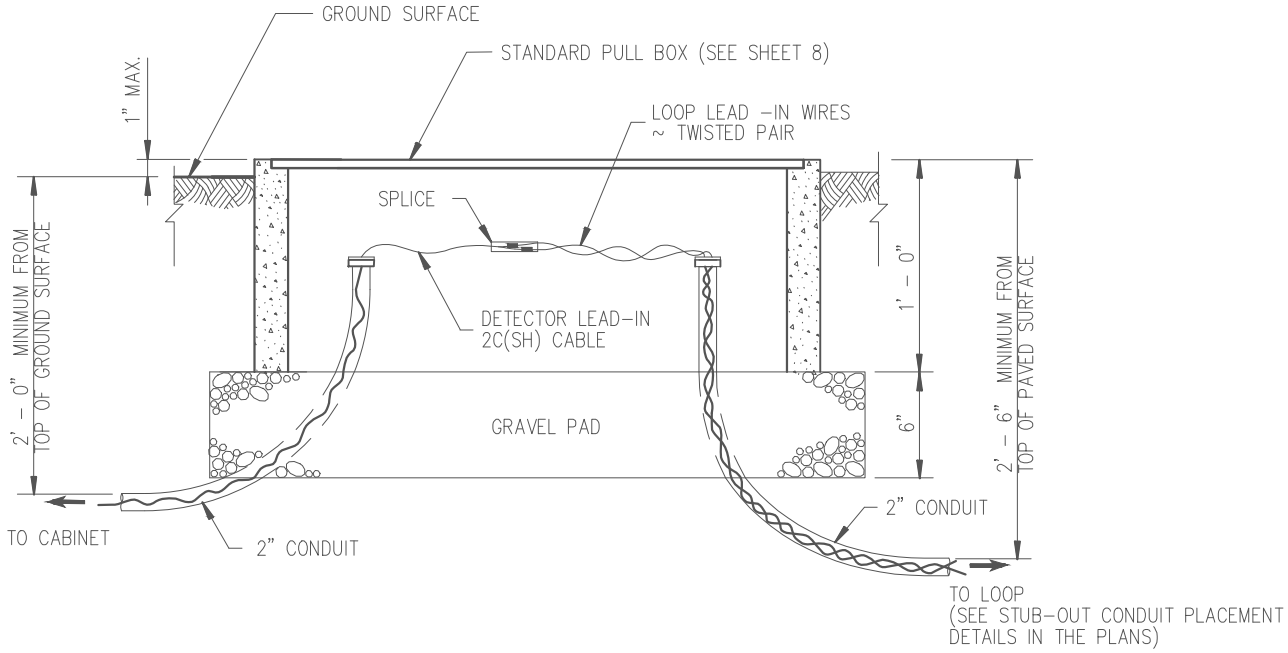

PULL BOX PLACEMENT DETAIL

APPROVAL:

DIRECTOR OF PUBLIC WORKS

REV #	DATE	DESCRIPTION
#	MM/YY	DESC 1
#	MM/YY	DESC 2
#	MM/YY	DESC 3

TRAFFIC LOOP (3) AND PULL BOXES

DATE: MM/YY

NOT TO SCALE

Centennial

STANDARD DETAIL NO.

SD-27